SPECIAL WORKSHOP ISSUE

Better Homes and Gardens®

WOOD®

OCTOBER 2003 ISSUE 151

The Shop-Proven Woodworking Magazine

28-PAGE SECTION

BUILD THE SHOP YOU ALWAYS WANTED

SAVE $5 ON WOODWORKING PLANS
SEE BOOKLET INSIDE

42 SHOP SOLUTIONS

Including:

- Shop layout secrets
- 4 essential tablesaw jigs
- Rock-solid workbench
- 6 must-have router bits
- Cabinet plans for every need

www.woodmagazine.com
Display until October 14, 2003
U.S.A. $6.99
0 92567 14072 5

TOOL TEST

3-HP BAD BOY TABLESAWS

5 EASY STEPS TO TABLE-MOUNT YOUR ROUTER

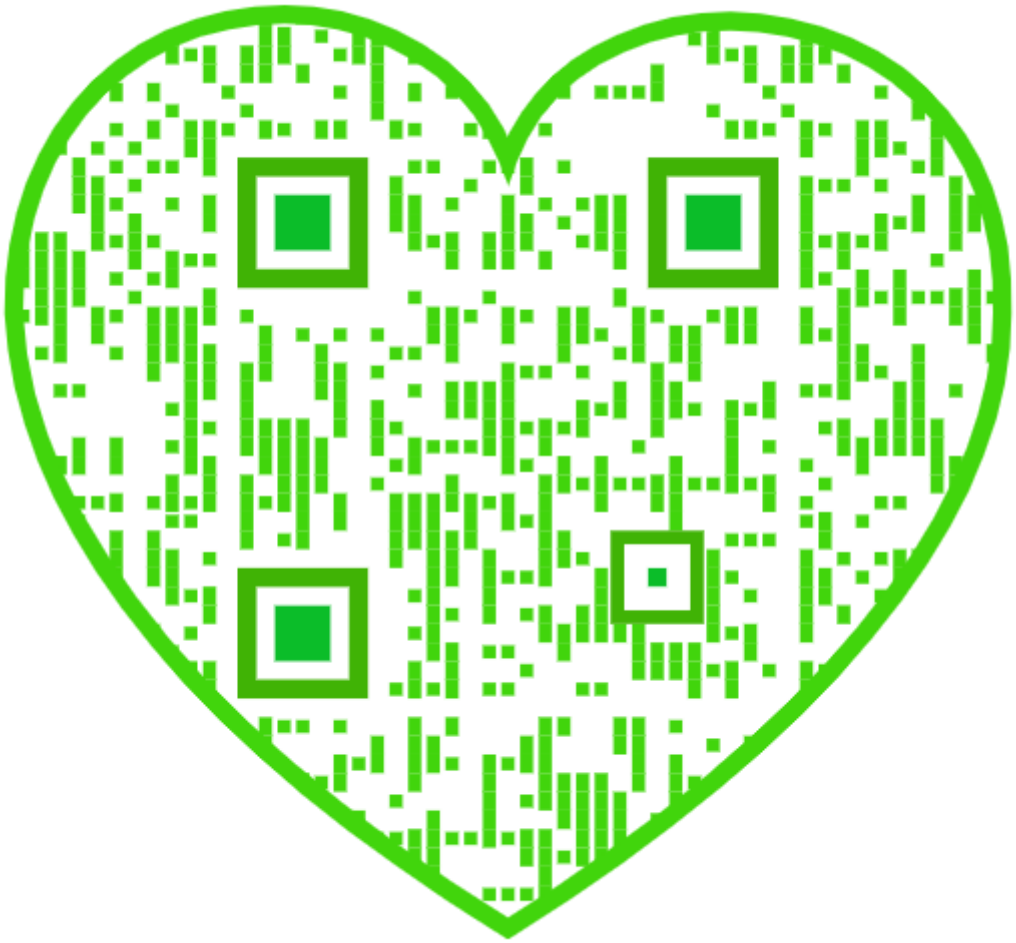

WOOD®

October 2003, Issue 151

WOOD MAGAZINE'S IDEA SHOP 5

AFFORDABLE • MOBILE • MODULAR • ADAPTABLE • EASY TO BUILD • MULTI-USE • SPACE-SAVING STORAGE

IDEA SHOP 5 COVERAGE

mobile sawing/routing center

8 **the chosen few: idea shop 5 tools**

12 **easy-mover mobile base**

44 **tour of idea shop 5**
See why this may be our best workshop ever.

48 **ultimate workshop floor cabinet**
Start with this versatile, yet simple design to make the cabinets shown at *left* and *right*.

56 **tough-stuff workbench**

58 **hands-on guide to workshop layout**
Using our tool templates, plan a workshop that makes sense for your space and needs.

70 **how to table-mount routers**
Learn to cut the table opening, and install a snug-fitting, tool-bearing insert plate.

72 **laying down a shop-floor finish**

98 **a simple way to level tables to tools**
Ensure extension tables measure dead-even with machine surfaces using this four-step process.

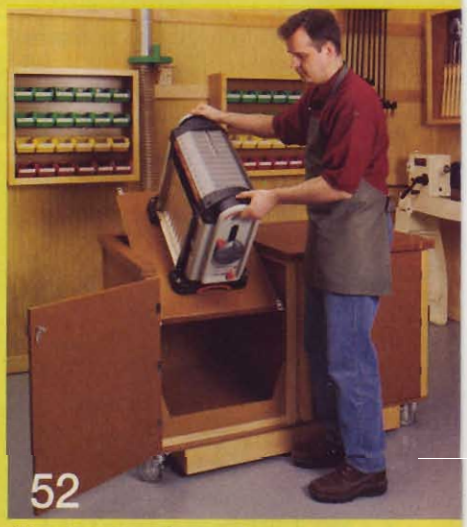

flip-top work center

WOOD MAGAZINE SHOP TESTED APPROVED™

This seal is your assurance that we build every project, verify every fact, and test every reviewed tool in our workshop to guarantee your success and complete satisfaction.

MORE PROJECTS

80 **super-useful tablesaw jigs**
Crosscut, taper, or slice thin strips of wood accurately with this trio of shop-made helpers.

86 **heavenly child's mobile**
Scrollsaw a fantasy universe of stars, planets, and more using the full-sized patterns inside.

88 **high-class collector's cabinet**

94 **Galileo thermometer**
Monitor room temps with this novelty project.

96 **tablesaw blade-height gauge**
Elevate your saw blade precisely with our adjustable scaled jig.

TOOLS & MATERIALS

14 **coloring maple made simple**

34 **3 hot new portable planers**

38 **must-have router bits**

74 **tool test: 3-hp tablesaws**
Upgrade your workshop with one of the cabinet-style machines featured in our test.

102 **6 shop-proven products**

DEPARTMENTS

4 **editor's angle**

6 **sounding board**

18 **ask *WOOD***

22 **shop tips**

32 **short cuts**

42 **workshop woods**

100 **wood words**

120 **what's ahead in our next issue**

Visit our Web site at www.woodmagazine.com for free woodworking plans, tips, shop tours, and more.

editor's angle

the #1 "project" for all of us

Woodworkers come in all shapes, ages, and backgrounds, and just as varied are the projects we build. Some of us make furniture, others prefer quick-and-easy projects, and many woodworkers do primarily turning or scrollsaw work. Yet, all of us share a love for our workshop, and often spend as much time improving it as we do building individual projects.

Staff who helped bring you Idea Shop 5, from left: Jeff Mertz, Kevin Boyle, Jan Svec, me, Dave Stone, Dave Campbell, Owen Duvall, and Chuck Hedlund.

For this very reason, we've devoted much of this issue to our fifth Idea Shop. To make that possible, we designed and built a complete workshop from scratch. During such events, everyone on the staff gets involved, especially the guys in the photo *above*. It's a lot of hard work, but there's no better way to bring fresh shop solutions to the fore, test new designs, and see how well they function together in a real shop. We've built previous Idea Shops in outbuildings, a garage that shares space with cars, and a basement. This time, the Idea Shop is located in the third stall of Design Editor Jeff Mertz's garage. (Lucky guy!)

So how did we decide on that setting? It all began when Jeff and his wife Jennifer decided to build a new home. Of course, while Jen was picking out carpeting and curtains, Jeff was focused on setting up a new shop. At the same time, several of us had been discussing that it was high time we did another Idea Shop. (Earlier Idea Shops debuted in issues 54, 72, 100, and 119.)

So the timing was perfect. Jeff's new garage was the right size and provided us with a "blank slate." More than that, we had a motivated new homeowner willing to invest a lot of his own time and sweat in the endeavor. A deal was struck, and you hold the results.

Personally, I'm pretty pleased with the way things turned out. The shop meets all of the goals for innovation and space savings that we established before work began. Those objectives, and others emblazoned on the Idea Shop logo, *left*, were dictated by what you, our readers, told us is important in a shop. I think you'll find at least one or two ideas you can put to work in your own shop.

Wanna be like Jeff? We're looking for a reader's shop that we can help redesign and improve. If you're interested, see the details on *page 46*.

Bill Krier

Better Homes and Gardens®
WOOD®

October 2003 • Vol. 20, No. 5 • Issue No. 151

Editor-in-Chief **BILL KRIER**
Executive Editor **JIM HARROLD**
Managing Editor **MARLEN KEMMET**
Features Editor **DAVID STONE**
Products Editor **DAVE CAMPBELL**
Projects Editor **JAN SVEC**
Projects Editor **OWEN DUVALL**
Techniques Editor **JIM POLLOCK**
Senior Design Editor **KEVIN BOYLE**
Design Editor **JEFF MERTZ**
Master Craftsman **CHUCK HEDLUND**
Production/Office Manager **MARGARET CLOSNER**
Administrative Assistant **SHERYL MUNYON**
Illustrators **LORNA JOHNSON, ROXANNE LeMOINE, TIM CAHILL, MIKE MITTERMEIER**
Technical Consultants **JEFF HALL, GARRY SMITH, JOHN CEBUHAR**
Contributing Craftsman **JIM HEAVEY**
Proofreaders **JIM SANDERS, BARBARA KLEIN**

Art Director **KARL EHLERS**
Associate Art Director **GREG SELLERS**
Assistant Art Director **CHERYL A. CIBULA**

Publisher **MARK HAGEN**

Advertising Office: 333 N. Michigan Ave., Suite 1500, Chicago, IL 60601 Phone: 312/853-2890 Fax: 312/580-7906
Sales and Marketing Assistant **NEILLE MORRIS**
Account Executive **RON GOLMINAS**
Direct Response Manager **CAROLYN DAKIS**
Direct Response Sales Representative **SANDY ROBINSON**
Account Executive **JOHN THORNBURGH**
Detroit, Phone: 248/356-1149 Fax: 248/356-8930
Account Executive **PAT TOMLINSON**
Northeast, Phone: 212/551-7043 Fax: 212/551-7192
Southeast: Lagomarsino, Dempsey & Dennis, Inc.
2951 Piedmont Rd., NE, Suite 100, Atlanta, GA 30305
Phone: 404/261-5400 Fax: 404/261-5404

Group Marketing Director **CATHY E. SMITH**
Senior Marketing Services Manager **ALEXANDER D. CLARKSON**
Phone: 212/551-7090 Fax: 212/551-7192
Senior Promotion Designer **SARAH DIBELLA**

Group Publisher **STEPHEN B. LEVINSON**

Associate Business Director **CRAIG FEAR**
Advertising Operations Manager **PAT HENDERSHOTT**
Consumer Marketing Director **JULIE MARTIN**
Vice President/Publishing Director **WILLIAM R. REED**

MEREDITH PUBLISHING GROUP
President **STEPHEN M. LACY**
President, Magazine Group **JACK GRIFFIN**
Executive Vice President, Publishing Group **JERRY KAPLAN**
Corporate Solutions **MICHAEL BROWNSTEIN**
Creative Services **ELLEN DELATHOUDER**
Manufacturing **BRUCE HESTON**
Consumer Marketing **KARLA JEFFRIES**
Finance and Administration **MAX RUNCIMAN**

Meredith CORPORATION

WILLIAM T. KERR, Chairman and Chief Executive Officer
In Memoriam — E.T. Meredith III (1933-2003)

©Copyright Meredith Corporation 2003
All rights reserved. Printed in the U.S.A.

Better Homes and Gardens® WOOD® magazine (ISSN-0743-894X) is published seven times a year in March, May, June/July, September, October, November, and December by Meredith Corporation, 1716 Locust St., Des Moines, IA 50309-3023. For subscription questions call **800/374-9663. Letters to Editor:** WOOD magazine, 1716 Locust St., GA-310, Des Moines, IA 50309-3023, or woodmail@woodmagazine.com. Periodicals postage paid at Des Moines, Iowa, and additional mailing offices. Better Homes and Gardens trademark registered in Canada and Australia. Marca Registrada en México. **ONE-YEAR SUBSCRIPTION PRICES:** U.S. and its possessions, $28; Canada, $41; other countries, $49. Canada Post Publications Mail Sales Product Agreement No. 40069223. Canadian BN 12348 2887 RT. **CANADIAN RETURN ADDRESS:** Better Homes and Gardens WOOD magazine, 2744 Edna Street, Windsor, Ontario, N8Y 1V2. **POSTMASTER:** Send address changes to Better Homes and Gardens WOOD magazine, P.O. Box 37439, Boone, IA 50037-0439.

MPA

sounding board

Our bulletin board for letters, comments, and timely updates

A new twist on a classic tool chest

When I saw the Craftsman-style tool-chest project in your June/July 2002 issue (page 42), it was love at first sight. Yet, I couldn't relegate such a beautiful design to my garage shop. So I modified the plan to create a coffee table, *left.*

I eliminated one of the drawers and scaled the piece up to about 18H×20W×32L". The wood is soft maple with quilted maple veneer for the panels and drawer faces. Both sides are identical except that the drawer pulls out from one side only. The side shown in the picture is actually a false drawer front. I plan to build a couple of matching end tables based on this same design.

Kevin M. Roberts, Katy, Texas

Reader builds knowledge and finds inspiration

I receive subscription offers for other woodworking magazines, but *WOOD®* is the only one I choose. I really enjoy your new "Wood Words" section (issue 149, page 110). In that same issue, the short piece about the blind woodworker, Ed Pritchard (page 38), was inspiring and heartwarming, and it made me thankful for the few abilities that I have as a woodworker. Thanks for the fine articles.

Warren W. Aafedt, Windsor, Conn.

Project update

Candle Lanterns (issue 148): The glass pieces (shown in **Drawing 3**, page 67) should measure 3 9/16" wide. If you already cut glass to the 3 11/16" size listed, leave two panes for each lantern at that width, and recut the other two to 3 7/16".

A shop teacher speaks out

I read about your mentoring contest (issue 148, page 4), and was very pleased to see that you are trying to do something to draw more young people into woodworking, and halt the decline of woodshop classes. I have been a shop teacher for 20 years, and I know that teaching these skills is important. Unfortunately, the new way of thinking is that shop classes are out of date, with limited value for today's students.

I often wonder how we developed such a great country with people trained in the traditional educational setting that included shop classes, home economics, and all that other "fluff." I know that my shop classes were the only things that kept some kids in school. It upsets me when people speak with pride of doing away with the "dirty old shops" in their schools. Keep up the good work.

Duane Strand, Detroit Lakes, Minn.

Thanks, Duane, for sharing your thoughts, and for helping young people discover the benefits of woodworking.

A scene from the past or inspiration for the future? Students enjoy a day in the shop.

HOW TO REACH US

■Editorial questions and feedback:
E-mail **woodmail@woodmagazine.com**; call 800/374-9663 and press option 2; or write to: WOOD magazine, 1716 Locust St., GA-310, Des Moines, IA 50309-3023.

■Subscription assistance:
To notify us of an address change, or to get help with your subscription, go to **woodmagazine.com/service**; call 800/374-9663 and press option 1; or write to: WOOD magazine, P.O. Box 37439, Boone, IA 50037-0439. Please enclose your address label from a recent magazine issue.

■To find past articles:
Go to our continuously updated online index at **woodmagazine.com/index**.

■To order past issues and articles:
Order past issues of *WOOD* magazine and our newsstand specials at **woodstore.woodmall.com**, or by calling 800/346-9663. Be aware that many early issues are sold out. For reprints, send $5 per article (no phone orders), including the article name and issue number, to: WOOD Article Reprint Service, P.O. Box 349, Kalona, IA 52247; make check or money order payable to "*WOOD* magazine."

■Updates to previously published projects:
For a complete listing of known changes in dimensions and buying-guide sources from issue 1 through today, go to **woodmagazine.com/editorial**.

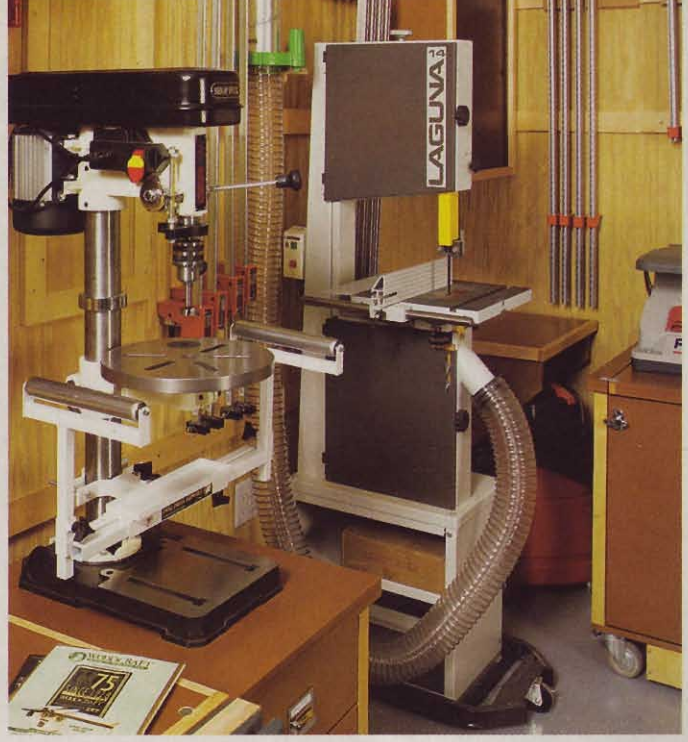

Tools rule in Idea Shop 5

Curious about which tools we chose for our latest shop, and why we selected them? Here's the inside scoop.

Put a dozen woodworkers in a room and, before long, they'll start talking about tools. Then, look out. The discussion can get pretty heated. Let's face it: We all have different preferences when it comes to price, features, and brand loyalty, not to mention the way the same tool feels in different people's hands.

That's why choosing the tools and accessories for Idea Shop 5 proved a challenge for the editors of *WOOD*® magazine. When the smoke cleared, though, we settled on an array of products that have proved themselves in our extensive tool tests through the years, and, in some cases, are innovative.

Of course, budget and space are always key concerns when outfitting any woodworking shop, and we kept a close eye on both. Wherever we could economize without significantly impacting performance, we opted for a benchtop tool instead of a stationary model.

That's not to say we didn't indulge ourselves occasionally. For example, Idea Shop 5 utilizes a cyclone dust collector, beefy ductwork, and blast gates that open and close automatically when you fire up a power tool. We believe dust collection is one key area in your shop where you shouldn't scrimp.

So, these are the power tools, hand tools, and accessories we chose. We've organized them into four categories, followed by a listing of phone numbers and Web sites for each supplier.

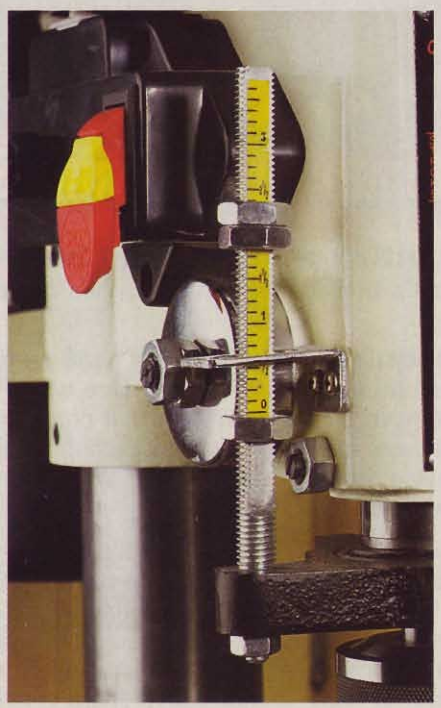

STATIONARY AND BENCHTOP MACHINERY

14" bandsaw **Laguna** LT14
2×42" belt/8" disc sander **Craftsman** 21528
Benchtop oscillating drill press **Shop Fox** W1668
Compound mitersaw **DeWalt** DW703
Cyclone dust collector **Penn State** #TEMPESTCC
Drum sander **Performax** 16-32 Plus
6" grinder **Grizzly** H4378 with G7120 stand
6" jointer **Grizzly** G1182HW
Lathe **Jet** JWL-1442
Mortiser **Jet** JBM-5
Oscillating edge belt/spindle sander **Ridgid** EB4424
13" planer **Ridgid** TP-1300
Tablesaw **Delta** 36-480

PORTABLE POWER TOOLS

26-gallon air compressor **Campbell-Hausfeld** WL6111
3×21" belt sander **Craftsman** 26819
Biscuit joiner **Porter-Cable** 557
2" brad nailer **DeWalt** D51238K
Corded drill **DeWalt** D21008K
Cordless drill (14.4 volt) **Makita** 6337DWDE
Detail sander **Fein** Multimaster MSXE 636-2
Jigsaw **Freud** FJ85
Random-orbit sander **Porter-Cable** Quicksand 333VS
Routers **Bosch** 1619EVS plunge router, **Makita** RF1101 multi-base router kit, **Porter-Cable** 8529 plunge router with router-table kit 75301
Vacuums **Craftsman** 17923 16-gallon wet/dry vac, **Fein** 9-55-13 9-gallon tool-triggered vac

Continued on page 10

www.amazon.com/delta
See over 824 Delta tools online.

Cut gracefull curves, resaw thick hardwoods, and make compound cuts with the new Delta X5 bandsaw.

DELTA X5

#28-475X

- 1-1/2 hp motor with enclosed stand and guarded drip proof motor
- Push button switch, chip chute, blade and belt guards
- Arbor and motor pulleys and V-belt, blade guides
- Platinum Pro bandsaw blade, quick release blade tension lever, integrated 4-inch dust port

**We will match our competitors price plus beat it by 10% of the difference. Find out more at www.amazon.com/price-match.*

Call for your FREE Tool Crib catalog
1-800-635-5140

amazon.com tools & hardware

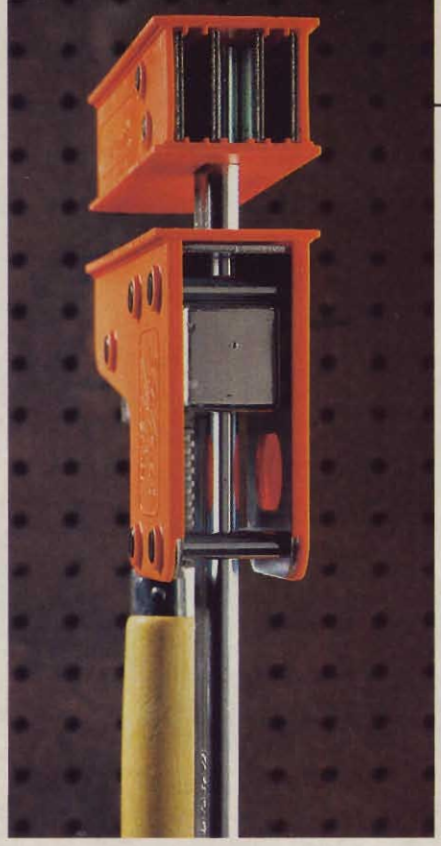

ACCESSORIES

Clamps
Bessey 8", 16", and 24" bar clamps
Quick-Grip 12", 18", and 24" Quick Change bar clamps; 6", 12" mini bar clamps; spring clamps
Jorgensen 24"and 48" bar clamps, 48" Deep-reach bar clamps (Adjustable Clamp Company)

Drill bits
MLCS 22-piece Forstner bit set #1707, 25-piece brad-point bit set #9154, 22-piece tapered bit set #9156, and 17-piece spade bit set #9500
Woodcraft Vix self-centering drill bits 16I41, 16I42, 16I43

Miter gauge **Incra** Miter3000

Mobile bases **Shop Fox** D2260 (jointer), **HTC** style J (bandsaw)

Rapid-action vise **Wilton** 78A

Router bits
Freud 15-piece router bit set 90-100
CMT 15-piece router bit set 800.001.11
MLCS 15-piece router bit set #8377
Oldham ¼", ⅜", and ½" round-over bits, 45° chamfer bit, and rabbeting bit set MR14
Woodline USA 15-piece router bit set WL-2022

Router-table fence **Freud** SH-5 adjustable fence system

Router-table insert plate
Rousseau RM3509 deluxe router baseplate

Router-table switch **Rousseau** RM3506 switch with crash bar

Safety equipment **MSA Safety Works**

Sandpaper **Mirka** Gold 5" hook-and-loop discs; **Supergrit** belts, discs, and sheets (Red Hill Corp.)

Saw blades
CMT ITK rip blade 250.024.10 and crosscut blade 205.060.10
Forrest Woodworker II combination blade WW10407
Freud combination blade LU84R011, crosscut blade LU85R010, and 8" dado set SD508
Oldham combination blade 100W40 and miter-saw blade 100W80

SHOP TIP

Drop a timely hint before you drop your dough

You might want to leave this article lying open where someone special can see it. After all, the holidays aren't far away.

HAND TOOLS AND MISCELLANEOUS

Hand tools
Woodcraft Caliper & divider set, no. 141597; center finder, no. 01M24; circle cutter, no. 15N31; cornering tool set, no. 03L51; dead-blow hammer, no. 15F17; doweling jig, no. 811564; Record No. 09-½ block plane, no. 02B20; Record No. 060-½ low-angle block plane, no. 01B11; Record spokeshave, no. 01H10; 22" hand saw, no. 17Z05; coping saw, no. 141403; crosscut razorsaw, no. 02P62; small Ryoba saw, no. 06Q11; straight backsaw, no. 17Z01; scrapers, no. 02Z10; scratch awl, no. 03H22; sliding bevel square, marking gauge, and square, no. 14C50; steel rules 6" and 12", nos. 129207 and 129208

Adhesives
Titebond and **Titebond II** (Franklin International)
Gorilla Glue polyurethane

Automated blast gates **Ecogate** EG001 Complete Startup Set

Dust-collection duct **Penn State** spiral duct

Fluorescent lighting **Lithonia Lighting**

Garage-floor coating **EPOXYShield**

Gas-fired heater **Reznor** model V3 UDAS

Lumber rack storage system
Woodcraft part no. 131189

Wood paneling **Georgia-Pacific** Ply-Bead

easy-mover mobile base

This adaptable platform combines stout construction and smooth mobility.

To take the strain out of moving the tool-bearing floor cabinets in Idea Shop 5 (*page 48*), we designed this simple rolling base. It features a ¾"-thick MDF platform (A) on a sturdy frame (B, C, D), and heavy-duty casters that swivel for unlimited mobility, but lock to keep any tool firmly planted while in use.

The dimensions here create a base that's sized for the mobile sawing/routing center (*page 62*). You can modify the plan to fit under most any tool or cabinet. Just follow the guidelines, *bottom*, to learn how.

Start by cutting the platform to size. Then, lay out and drill the holes for the frame-mounting screws, where dimensioned. Now rout ⅛" round-overs on the platform edges, as shown.

To locate the casters, mark the outermost mounting hole on each one's plate, where dimensioned. Drill the remaining holes, but don't mount the casters yet.

Next, cut the support frame pieces to size. Predrill the countersunk shank and pilot holes, where shown, to receive the #8×1¾" screws that join the frame.

Place the platform on the frame, ensuring consistent overhangs on all sides. Using the platform's shank holes as guides, drill pilot holes into the frame. Then, screw the platform to the frame.

Finally, apply a coat of clear finish to the entire project, attach the casters, and mount any shop tool or fixture that you want to make mobile.

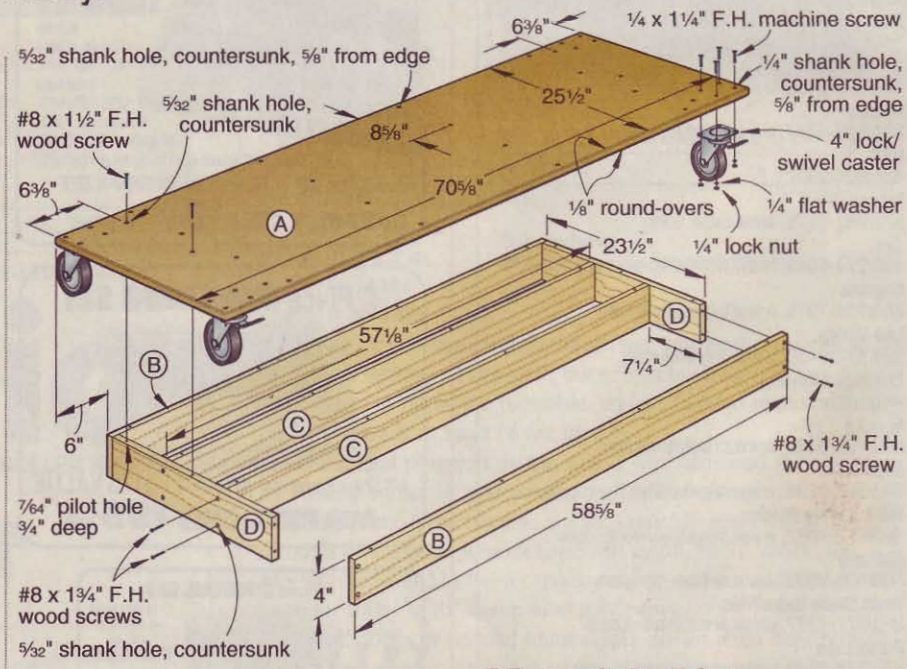

Illustration: **Roxanne LeMoine**

Materials List

Part	FINISHED SIZE T	W	L	Matl.	Qty.
A platform	¾"	25½"	70⅝"	MDF	1
B front/back frames	¾"	4"	58⅝"	M	2
C center frames	¾"	4"	57⅛"	M	2
D end frames	¾"	4"	23½"	M	2

Materials key: MDF–medium-density fiberboard, M–maple.

Supplies: #8×1½" flathead wood screws (22), #8×1¾" flathead wood screws (16), ¼×1¼" flathead machine screws, lock nuts, and washers (16).

Buying Guide

Casters: 4" Lock/Swivel Casters 00K20.01 (4), $11.50 each. Lee Valley Tools; 800/871-8158 or www.leevalley.com.

Sizing Guidelines

You can resize the mobile base easily to suit almost any need. Here's how:

1) Determine the size of the platform (A).
2) Length of B=Length of A–12"
3) Length of C=length of B–1½"
4) Length of D=width of A–2"

Note: Overall base height equals 5¾". Weight capacity (including the base) is 600 pounds.

coloring maple made simple

Many woodworkers rely on stains for every change of color, but you'll get better results on this dense wood with dye or tinted shellac.

Mix two parts of denatured alcohol with one part of premixed shellac from a can to make a thin form of shellac (approximately a 1-lb. cut). To tint this mixture, add one or two drops of alcohol-soluble dye per 4 oz. of shellac. Brush, spray, or wipe it on your maple project to produce clear, even color.

Hard maple looks like the woodworker's version of a painter's blank canvas—virtually white, and ready to be transformed with any color you choose. That's why we selected maple for the child's mobile on *page 86*, and then used food coloring to get the cheerful tones we wanted.

When you want to transform maple with even more vibrant colors or traditional wood tones, you need something beyond simple food coloring. Just remember that when it comes to hard maple, stain can be a pain. You'll get better results if you rely on dye—or give tinted shellac a try, as we did on the stool shown *above right*.

Dyes vs. stains

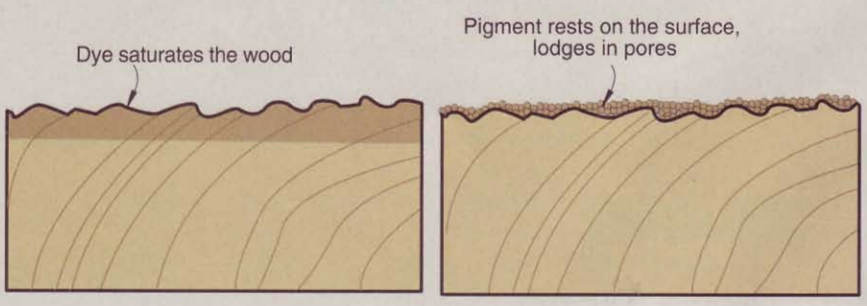

Dyes penetrate the wood, allowing the grain to show through. Pigmented stains work like thin paint, resting on the wood surface. A heavy application can obscure the grain.

How they work

The illustration at *right* shows you how stains and dyes work differently. A product labeled as stain contains relatively large pieces of pigment. It colors wood by depositing that pigment in pores and grain lines. Because hard maple is quite dense, a pigmented stain finds few places to lodge. When you wipe off the excess, very little color remains behind. What does remain behind may create a blotchy appearance because maple tends to have an irregular grain that absorbs stain in different degrees.

By contrast, dyes contain extremely tiny particles of color, and penetrate

Continued on page 16

throughout the surface of a piece of wood. They produce rich color and a generally smooth appearance on hard maple, but you still might see blotching. Dyes come in many bright colors, as shown on the samples, *below*, *right*.

Applying dye

You can use either oil- or alcohol-based dye or water-based dye, all available in woodworking stores and through mail-order catalogs. As a general rule, go with water-based dyes. They penetrate deeper than the other kinds, so they fade less. Alcohol-based dyes fade the quickest, and oil-soluble dyes rank in the middle of the fading scale.

However, water-based dyes raise the wood's grain. Defeat that problem by sanding the wood, thoroughly wetting it with clear water, and finally smoothing the raised grain the next day with 220-grit sandpaper. Then you can apply the water-based dye without raising more grain.

Choose either liquid or powder form. Tiny lumps of dye can remain undissolved after you mix a powder dye with its solvent, so strain the mixture through a paper filter or cheesecloth.

Test your dye on a sample of your maple stock. When you're satisfied, brush, spray, or wipe the dye mixture on your project, and then wipe off the excess before it dries. You can modify the result by adding any number of dye colors directly on the wood, creating new shades.

Shellac solves problems

Bright dyes tend to work well on maple, but sometimes you might see uneven coloring with wood-tone dyes. If that happens on your test piece, try tinted shellac. Start with a 1-lb. cut of shellac, and then add either a mix of alcohol-soluble dye and denatured alcohol or a premixed liquid dye.

Test the color on scrap, and then brush, spray, or wipe it on your proj-ect. Because shellac forms a film, this approach places color on the surface of the wood instead of depending on even penetration, virtually guaranteeing a consistent appearance.

If you need bright colors on maple, choose dyes for the kind of results you see here. We mixed the dyes with water.

ARROW
ET200™
DRIVES 4 SIZES OF NAILS WITH NO EFFORT
Comfortable Ergonomic Styling with Cushioned Non-Slip Grip.
DRIVES 4 DIFFERENT SIZE BRAD NAILS UP TO 1¼" LONG
SURGE POWER 14 AMPS
Nail Master 2 ELECTRIC BRAD GUN
Trigger and Surface Safety Locks.
Non-Marring Bumper.
New Heavy Duty Nail Driving Power with Built-in 10' Cord.
ET200™ ELECTRIC BRAD NAIL GUN
Available at home centers, lumber yards and hardware stores, wherever fine tools are sold.
ARROW
Arrow Fastener Co., Inc., 271 Mayhill Street, Saddle Brook, New Jersey 07663
Canada: Jardel Distributors, Inc., 6505 Metropolitan Blvd. East, Montreal, Quebec H1P 1X9
United Kingdom: Arrow Fastener (U.K.) Ltd., Unit 5 ZK Park, 23 Commerce Way, Croydon CR0 4ZS, Surrey
www.arrowfastener.com Rev.1002

ask wood

Answers to your questions from letters, e-mails, and WOOD ONLINE®

Take it easy with clamp pressure

Q: As a newcomer to woodworking, I'm not sure how much clamping pressure to use on joints made with woodworker's yellow glue. Can you give me some guidelines?

—John Burns, St. Paul, Minn.

A: John, the short answer is that a good-fitting joint with the right amount of glue doesn't require tremendous pressure. The clamps just serve to hold the surfaces in contact while the glue dries.

However, let's assume that most joints fall short of perfect, and benefit from enough force to push them into complete contact. Dale Zimmerman of Franklin International, maker of Titebond woodworking glues, recommends 100 to 150 pounds per square inch (psi) for clamping softwoods and 175–250 psi for hardwoods. When we tested one-handed bar clamps (issue 139), we found that they provided pressure just into the softwood range, or a bit less. Squeeze those clamps as hard as you can. But R. Bruce Hoadley, author of the book *Understanding Wood*, reports that other kinds of clamps, including the bottom three pictured at *right*, can produce far more pressure than needed. So don't go beyond "snug" when tightening those clamps.

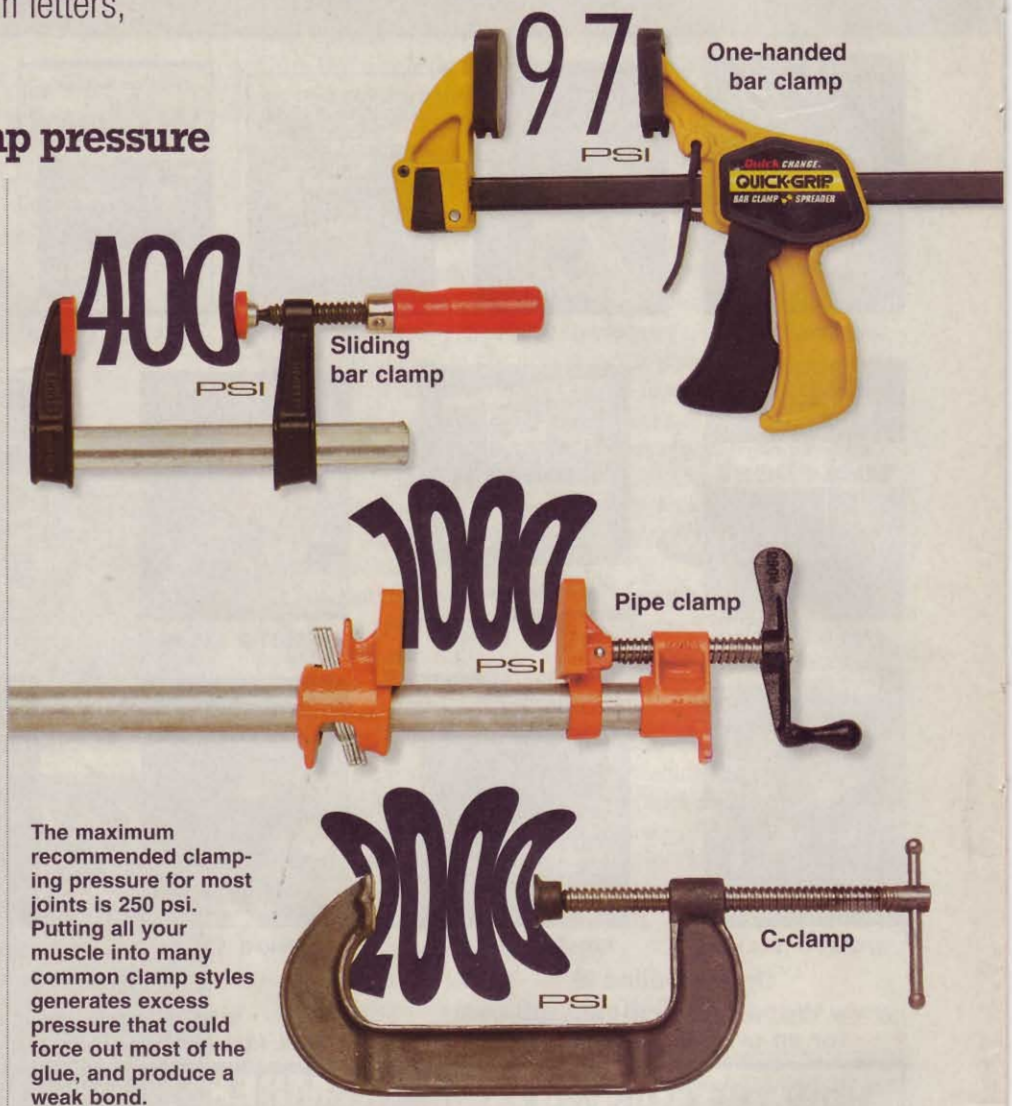

The maximum recommended clamping pressure for most joints is 250 psi. Putting all your muscle into many common clamp styles generates excess pressure that could force out most of the glue, and produce a weak bond.

Give old furniture a good cleaning

Q: What's the best way to clean accumulated grime from old furniture? I don't want to damage the finish, which is still in good shape.

—Jeff Morris, Milwaukee

A: Start with soap and water, Jeff, and get more aggressive only as necessary. Mix a tablespoon of dishwashing liquid (it's not alkaline, like some household cleaners, and won't damage lacquer or shellac) in a quart of warm water. Stir it up to make suds, dip a piece of terry cloth into the suds only, and begin rubbing away the grime. You can increase the cleaning effect by dipping the cloth into the water, but don't let water stand on the wood; clean a small area, and then towel it dry. If stronger measures are required, moisten a cloth with naphtha, and rub. If you're still not satisfied, apply naphtha to a fine-grit scrubbing pad. To get into detailed areas with either soap or naphtha, use a nylon bristle brush, such as an old toothbrush.

When you want to restore furniture without stripping the finish, start with soap and water. Ordinary dishwashing soap removes a lot of grease and dirt.

Continued on page 20

YOUR GARAGE IS YOUR CASTLE.

Give it the royal treatment with a $10,000 MAKEOVER.

It's America's Ultimate Garage Contest. Win a $10,000 garage makeover courtesy of Rust-Oleum® EPOXYShield®. Describe what your garage means to you, why you deserve a garage makeover, and what makes for an ideal garage, in 300 words or less. Then, include a color photo of the interior of your garage. The winner will receive "An Ultimate Garage Makeover" from a Home Depot® approved contractor. Included in your new look will be a showroom-quality floor protected with EPOXYShield Garage Floor Coating.

ONE GRAND PRIZE
$10,000 Garage Makeover

ONE SECOND PRIZE
Trip to a continental US city

25 SEMI FINALIST PRIZE PACKAGES
EPOXYShield Garage Floor Coating Kits

RUST-OLEUM®
stopping rust is just the start.™

No purchase necessary. Contest is open August 1 – October 15, 2003, to legal U.S. residents ages 18 and over. Enter online at epoxyshield.com, rustoleum.com, homedepot.com, or mail entries, including first and last name, date of birth, address (including zip code), telephone number, color photograph of the interior of your garage and a description, in 300 words or less, of your ideal/ultimate garage and why you are most deserving of your dream garage. Mail entry in a stamped envelope to: America's Ultimate Garage Contest, P.O. Box 39101, Chicago, IL 60639. Entries must be postmarked by Wednesday, October 15, 2003. Void where prohibited. For official contest rules visit epoxyshield.com or homedepot.com.

THE HOME DEPOT
You can do it. We can help.

Metal slides, meet solid-wood sides

Q: Can I install metal drawer slides on a solid-wood cabinet without creating wood movement problems?

—Al Clarke, Texarkana, Texas

A: We haven't experienced any problems in doing that, Al, and the Accuride hardware company, a maker of drawer slides, isn't aware of any either, according to a spokesman. When you install the cabinet side part of the slide, you'll see holes, vertical slots, and horizontal slots. The slots make adjustment easier as you line up the drawer. Once you have everything aligned, put a screw through the round hole nearest the front of the cabinet. That pins the slide so that it remains aligned with the front. Then, put a screw in the center of each horizontal slot along the rest of the slide's length. The screws will slide slightly in the slots under the pressure of normal wood movement. Remove any screws that you placed in vertical slots.

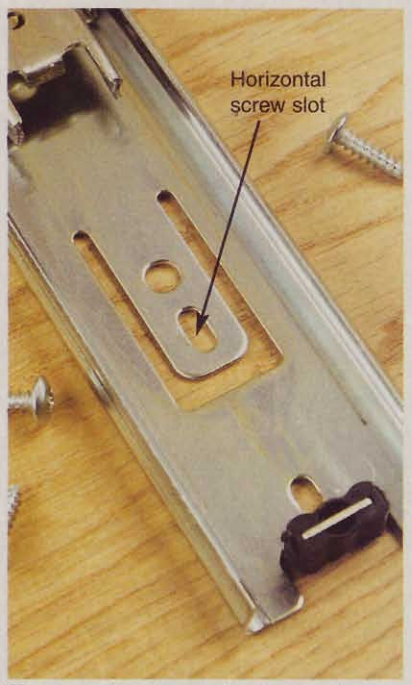

When you have occasion to mount metal drawer slides across the grain of a solid-wood cabinet side, take advantage of the horizontal screw slots. Screws placed here hold the slide in place, but allow wood to move.

A little dab holds the router bushing

Q: When I put a guide bushing in my router, and tighten it to the mounting ring with pliers, the ring usually works loose before the job ends. Is there some way to keep it in place?

—Jim Bishop, Lincoln, Neb.

A: Try a drop of thread-locking fluid, Jim. It comes in different styles for different purposes, and for this job you want the medium-strength version. Look at a hardware store or home center for Loctite Threadlocker Blue, or a similar product. It will hold the bushing assembly in place despite the vibration caused by routing. To avoid difficulty separating the bushing and the mounting ring, take them apart at the end of your workshop session, and clean the residual material out of the threads with an awl or a brass brush.

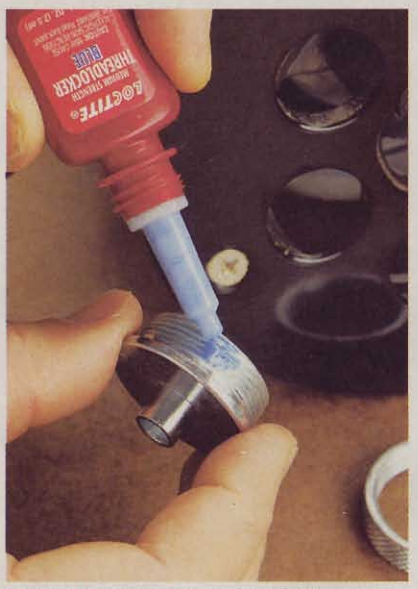

Thread-locking fluid helps hold your guide bushing and its mounting ring in place despite the router's vibration.

Got a question?

If you're looking for an answer to a woodworking question, write to **Ask WOOD, 1716 Locust St., GA-310, Des Moines, IA 50309-3023**, or send us an e-mail at **askwood@woodmagazine.com**. For immediate feedback from your fellow woodworkers, post your question on one of our woodworking forums at **www.woodmagazine.com**.

shop tips

Helping you work faster, smarter, and safer

Plug lock strikes a cord for safety

top shop tip

My wife and I don't have kids of our own, but we got a good lesson in child safety when my young nephew came to visit one day. While exploring "Uncle Mat's" stuff, he dug out my circular saw and gave me a good scare. (See "Our Winner," at *right.*) Later that day while looking around the hardware store, I noticed a set of tiny luggage padlocks and knew I'd found a solution.

The blades of most, if not all, electrical plugs have a hole in the end, and the shackle of the padlock fits nicely in that hole. With the padlock closed, the tool can't be plugged in.

The locks I bought were in a set of four, all keyed alike (meaning all of them open with the same key), and that key stays on my key ring. As a bonus, my buddies, as well as the guys on the job site, can't "borrow" my tools without my permission (and my key!).

—Mat McCarthy, Lake City, Tenn.

This cat-box filler makes a great rust-buster

Here in central Florida, the humidity wreaks rusty havoc on our woodworking tools. Keeping a good coat of wax on cast-iron tables prevents damage on power tools, but smaller hand tools, such as planes, chisels, and even socket wrenches, are harder to protect. I used to scatter those little packages of silica gel (that come with cameras and electronic gear) in the drawers of my tool chest to absorb the moisture, and it worked pretty well.

One day recently, I saw a container of Tidy Cat Crystals cat-box filler on the shelf at the grocery store, and noticed that it's made almost exclusively of silica granules. I brought some home, tied it up into packets (such as the one shown in the drawing) made from old nylon stockings, and then dropped several of the packets in my tool drawers. Using only these packets, my hand tools have survived more than a year without rusting.

—Charlie Lowell, Kissimmee, Fla.

Continue on page 24

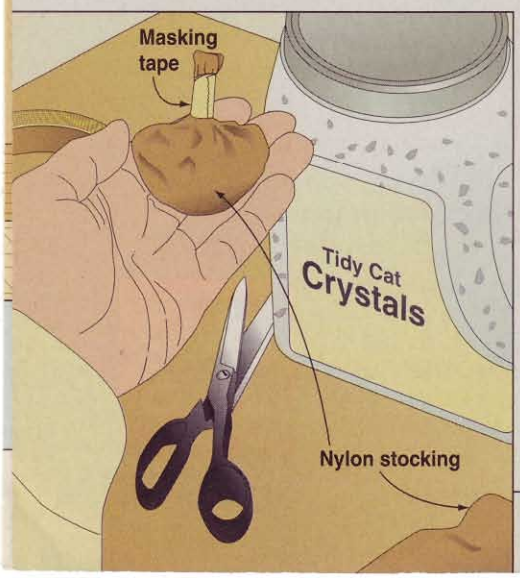

Our Winner

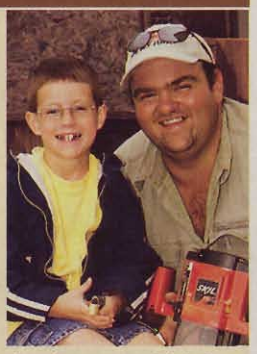

A carpenter by trade, Mat McCarthy got a wake-up call one day when he spied his 7-year-old nephew, Nicky, dragging around his circular saw, which he thought had been safely tucked away. "You can imagine how my heart sank when I thought about all the 'what-ifs' had Nicky plugged that thing in," he recalls. We liked Mat's safety solution (shown at *left*) so much, we awarded him our Top Shop Tip tool prize.

We're sending a Jet DC-650CK dust collector with canister filter to Mat McCarthy for sending in this issue's Top Shop Tip. Enjoy it, Mat!

Top tips win top tools!

Describe how you've solved a workshop dilemma, and you'll earn $75 if it appears here. And, if your tip garners Top Shop Tip honors, you'll also win a tool prize worth at least $250.

Send your best tips, along with photos or illustrations and your daytime telephone number, to: **Shop Tips, *WOOD*® Magazine, 1716 Locust St., GA-310, Des Moines, IA 50309-3023**. You can also e-mail tips to **shoptips@woodmagazine.com**, or post them on the Top Shop Tip forum at **www.woodonline.com**.

Because we try to publish only original tips, please send your tips only to *WOOD* magazine. Sorry, but submitted materials can't be returned.

PERGULA LIGNARIUS

WOODCRAFT®
UNIVERSITY

There's a Woodcraft University location near you

Alabama
Birmingham Area
Arizona
Tempe
Tucson
California
Sacramento
San Francisco Bay Area
Santa Rosa
Colorado
Colorado Springs
Denver
Connecticut
Hartford Area
New Haven Area
Florida
Clearwater
Casselberry
Georgia
Atlanta Area
Hawaii
Honolulu
Idaho
Boise
Illinois
Palatine
Peoria
Indiana
Evansville
Indianapolis
Iowa
West Des Moines
Kansas
Lenexa
Kentucky
Louisville
Maryland
Towson
Massachusetts
Woburn
Michigan
Canton
Sterling Heights
Minnesota
Bloomington
Missouri
St. Louis Area
New Hampshire
Portsmouth Area
New Mexico
Albuquerque
New York
Rochester
North Carolina
Charlotte Area
Raleigh
Ohio
Cincinnati Area
Cleveland Area
Columbus Area
Dayton
Oklahoma
Tulsa
Oregon
Eugene
Portland Area
Pennsylvania
Harrisburg
Philadelphia Area
Pittsburgh Area
Rhode Island
East Greenwich
South Carolina
Charleston
Tennessee
Knoxville
Texas
Austin
Dallas Area
Fort Worth
Houston
San Antonio
Utah
Salt Lake City Area
Virginia
Richmond
Washington D.C. Area
Washington
Seattle
West Virginia
Parkersburg
Wisconsin
Appleton/Fox Cities Area
Madison
Milwaukee Area
Woodworker's Club:
Connecticut
Norwalk
Maryland
Rockville

WOODCRAFT®
For your local woodcraft store, visit www.woodcraft.com, or for a free catalog, call 800 542-9115

Dept.03WI10BE
Circle No. 700

Extra slot keeps biscuits from rising

When planing a glued-up panel, I usually flip-flop it several times, always watching for the most interesting grain pattern to emerge. Before long, I've lost track of which side is which. And, I once accidentally planed deep enough that the biscuits that joined the panel's boards popped up, ruining a beautiful panel.

To avoid this, I now cut an extra biscuit slot in the waste area of the panel while I have my biscuit joiner out. (I make the panels extra long, and then trim the ends to remove any snipe.) Now, I always know when I'm planing too close to a biscuit.

—Jim Culler, Bellville, Ohio

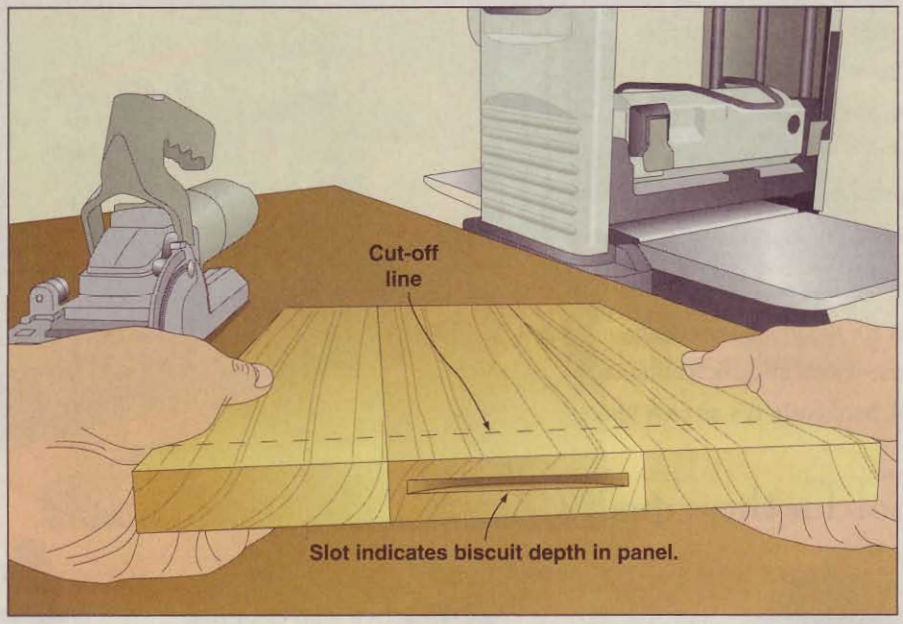

Fast flush-trimming for multiple pieces

Here's a way to quickly trim the solid-wood edge banding on plywood shelves yet still give good support for your router. First, cut dadoes to fit the shelving in a single piece of scrap plywood, then rip that piece down the middle to make two perfectly matched caps.

Clamp the shelves between the dadoed caps, as shown at *right*, then trim the banding with a flush-trim bit in your router. The shelves on either side keep the router from tipping.

If your router wants to tip when routing the outer shelves, rout all of the inside edges first, then unclamp the caps, swap the outside shelves with a pair of inside shelves, and trim the remaining two edges.

—Ike Evans, Coralville, Iowa

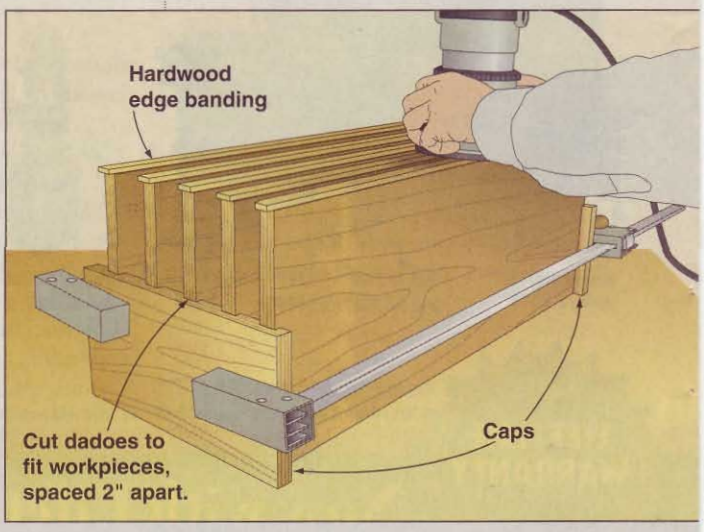

Continued on page 26

Simple stop keeps fence away from the blade

My tablesaw's rip fence moves so easily along the rail that I wanted to make sure I could never accidentally slide the fence into the raised blade. So, I added a stop bolt to the fence rail that limits the fence's travel.

After setting the fence ⅛" from the blade, I drilled and tapped a hole for a 1"-long stop bolt just left of the fence's locking-lever housing. (You may have to locate your stop bolt on the top of the rail, depending on your fence design.) Finally, I installed the bolt in the hole.

—Luther Woodward, East Liverpool, Ohio

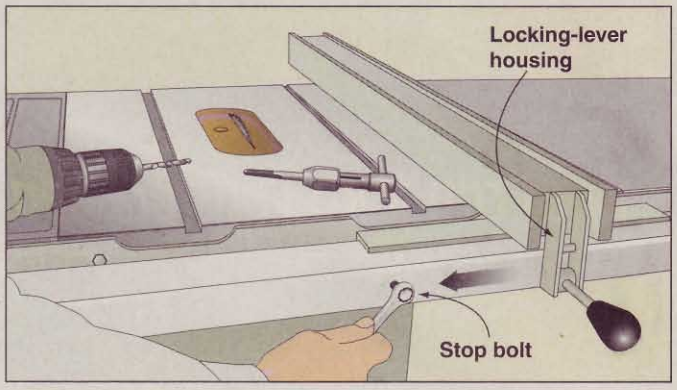

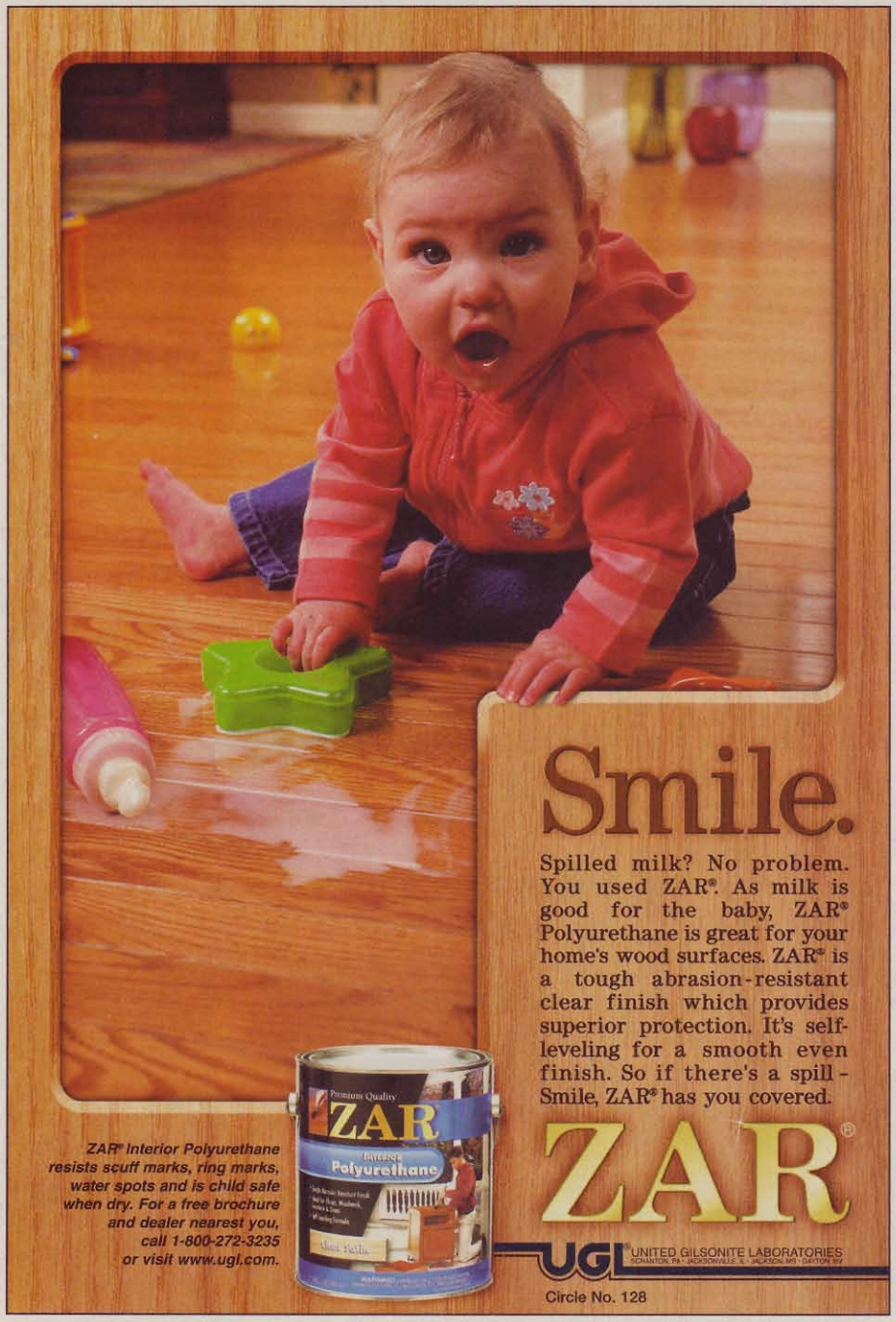
Smile.
Spilled milk? No problem. You used ZAR®. As milk is good for the baby, ZAR® Polyurethane is great for your home's wood surfaces. ZAR® is a tough abrasion-resistant clear finish which provides superior protection. It's self-leveling for a smooth even finish. So if there's a spill - Smile, ZAR® has you covered.
ZAR®
ZAR® Interior Polyurethane resists scuff marks, ring marks, water spots and is child safe when dry. For a free brochure and dealer nearest you, call 1-800-272-3235 or visit www.ugl.com.
UGL UNITED GILSONITE LABORATORIES
Circle No. 128

Drilling "clean holes" redefined

To keep crumbs of sawdust, plaster, or drywall from getting down into the carpet when drilling holes for a built-in project, here's a technique that minimizes the mess. After marking the hole location on the wall, place a piece of clear double-faced tape over the mark. Now, stick a zipper-type storage or sandwich bag to the tape, about two-thirds up the bag.

Grab only the outside layer of the bag and pull it out gently as you drill through the bag into the workpiece. Once the bit pierces the bag, the outside layer will want to "climb" the bit, opening the inside of the bag (you may need to help it a little by tugging on it). The crumbs drop harmlessly into the bottom of the bag, which you can zip up and drop in the garbage after removing it from the workpiece.

—Chuck Hedlund,
WOOD® magazine master craftsman

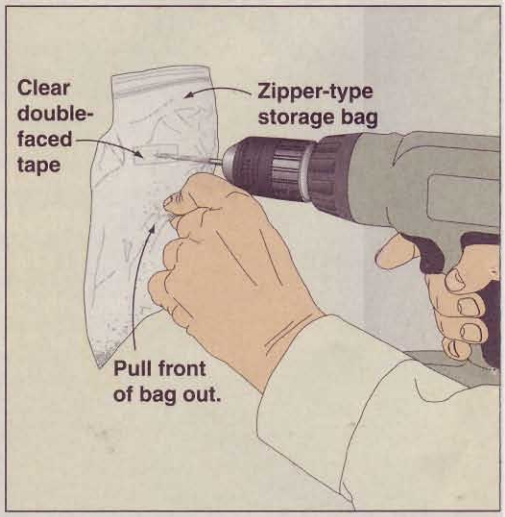

Taming the unruly band clamp

I got tired of finding my band clamps all balled up in a drawer, so I devised these ultra-simple holders to keep them in order. Using a parting tool, I turned ⅛×⅛" grooves in a 2"-long ¾" dowel, where shown in the drawing, *below*. Next, I cut a ½" dowel to 1⅛" long, bored a 3/16" hole through its center, and threaded a rubber band through the hole.

To store my clamps, I wrap the loose end of the strap around the ¾" dowel "core," and then secure it with the rubber band and small dowel. When I need to use the clamps, I just unroll as much as I need. If you ever use those ratcheting tie-down straps for your truck or trailer, you can use the same method, but you may need to lengthen the "core" dowel to suit wider straps.

—Marc Phillips, Warner Robins, Ga.

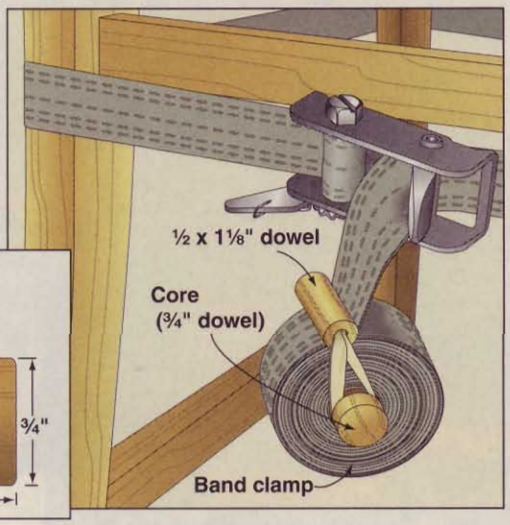

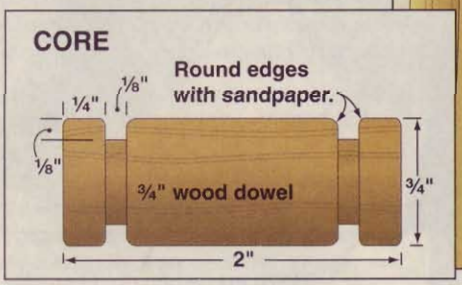

Belt-sand small pieces without "filing" your nails

While making the snowman intarsia project in *WOOD®* magazine issue 75, I used my benchtop belt sander to bring some of the pieces to proper thickness. But some of those small pieces put the tips of my fingers dangerously close to the abrasive.

After some experimentation, I found an easy way to sand those small parts. First, scrollsaw a cutout to the same shape but slightly larger than the piece to be sanded in a scrap of ¼" plywood. With the plywood "mask" placed gently against the abrasive and tight against the sander's fence, insert the workpiece into the cutout, as shown at *right*, and carefully sand to the desired thickness.

The concept works equally well for sanding small parts with your random-orbit sander. In this case, though, you'd place the mask on your benchtop, and sand the top of the workpiece.

—Dave Edwards, Chattanooga, Tenn.

Continued on page 28

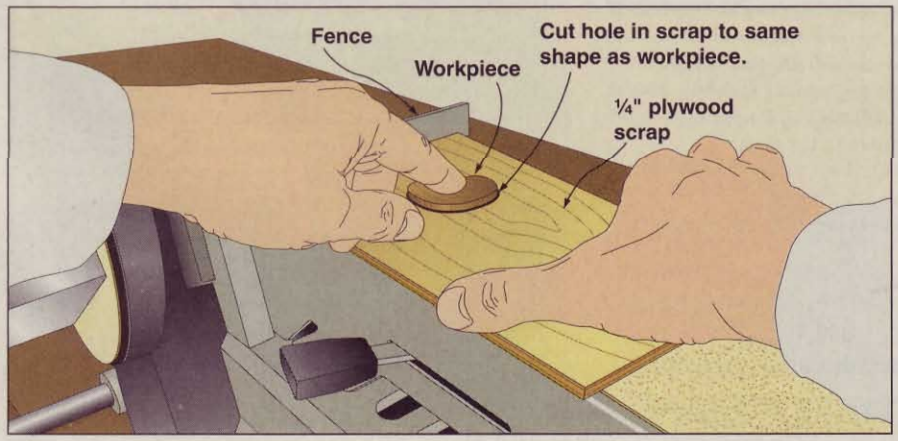

The Toughest Glue On Planet Earth

Gorilla Brand Premium Glue is the all purpose, interior/exterior glue ideal for most repair and bonding needs. It's great for indoor/outdoor furniture repair, woodworking projects, as well as general repairs around the house. Bonds wood, stone, metal, ceramic and more! Incredibly strong and 100% waterproof.

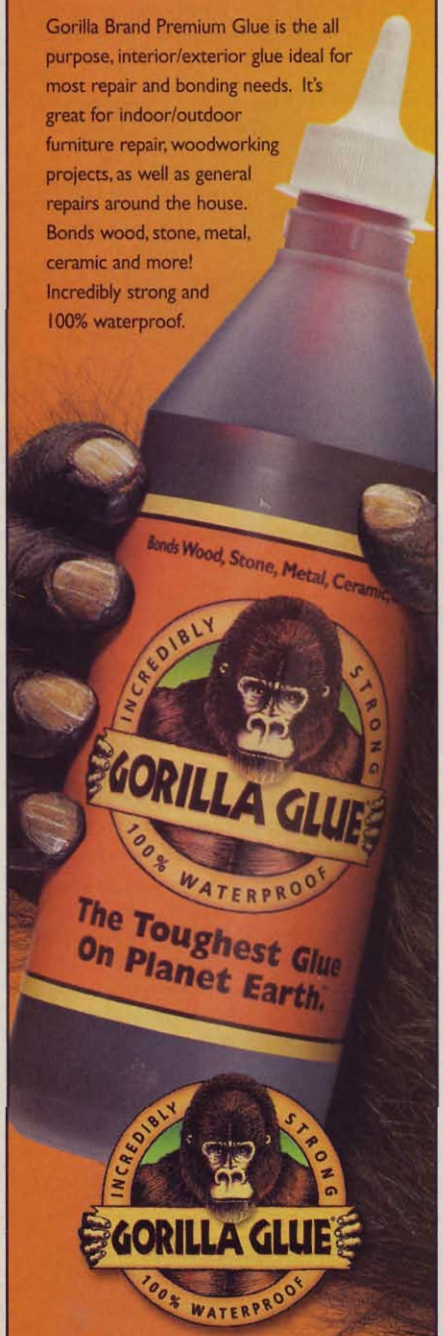

for retailers near you:
www.gorillaglue.com
1-800-966-3458
Circle No. 50

Pin down those small pieces for safety

As a woodturner, I make segmented turnings almost exclusively. I cut many of those segments on a compound mitersaw. The thing is, the spinning blade can suck a small piece right back into the teeth and send it sailing around the shop. To prevent that, I made the small-parts hold-down, shown at right.

First, I disassembled a spring-type clothespin and cut off one jaw. I then attached that to a scrapwood stopblock with a single drywall screw. Through the remaining jaw, I drove another drywall screw, then reassembled the clothespin on the stopblock.

The spring pressure and the point of the jaw screw provides enough grip to hold the cutoff in place. If I need a little more tension, I simply drive the jaw screw in a little farther.

—Bob Uding, Homosassa Springs, Fla.

Continued on page 30

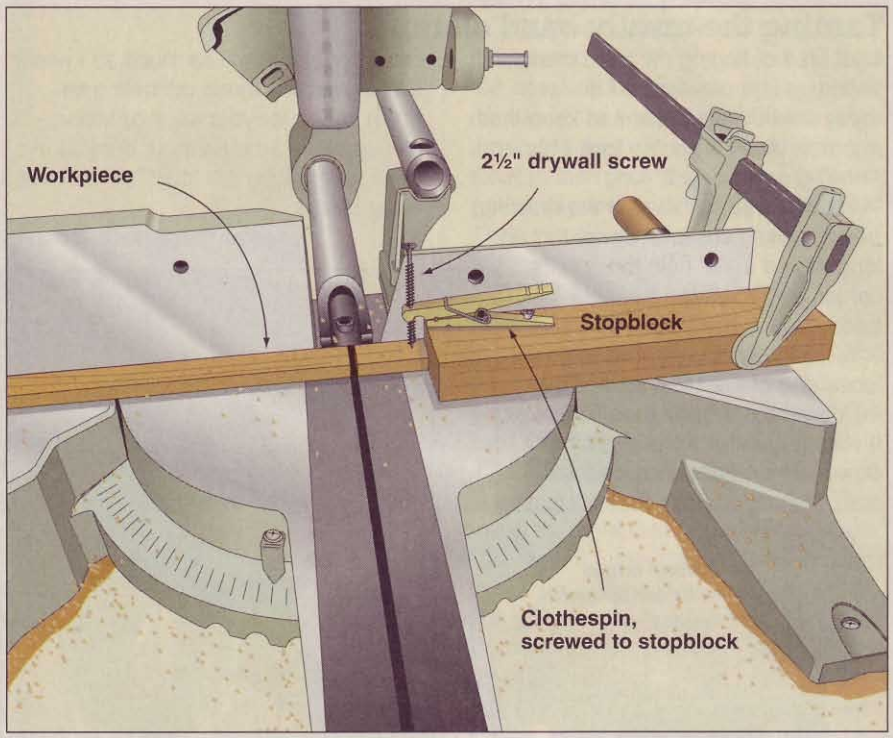

Talented Creator. Skilled Hobbyist.

BUSINESS OWNER.

You're already two. With Guardsman FurniturePro®, you can become all three!

Guardsman FurniturePro is a network of franchises specializing in furniture-related services. Guardsman FurniturePro has available territories throughout North America.

TRAINING AND SUPPORT PROGRAMS:
- Comprehensive initial training
- Ongoing regional workshops
- Web-based support programs
- 24-hour technical assistance
- Access to fellow FurniturePro franchisees

GUARDSMAN FURNITUREPRO CUSTOMERS:
- Homeowners
- Furniture retailers
- Restaurants and Hotels
- Professional office buildings
- Moving and storage companies

NOT TO MENTION:
- Protected territories
- Affiliation with the most established and respected name and presence in the marketplace
- The support of a $2.2 billion company, and the largest manufacturer of furniture finishes in the world.
- Affordable franchise entry fees, as low as $9,500
- Home based with low overhead!

For Franchise Information Call 800.496.6377
www.guardsmanfurniturepro.com.

GUARDSMAN FurniturePro®
The most trusted name in furniture repair

Profit Centers

Furniture Repair - gouges, scratches, burns, water marks, dents and more

Leather Cleaning and Repair - stain removal, recoloring, and more

Upholstery Services - spot cleaning, panel replacement, seat re-upholstering

Cabinet Refurbishing - cleaning, degreasing, repairing and polishing

Refinishing - complete stripping and refinishing using an eco-friendly, water-based system

LAGUNA TOOLS

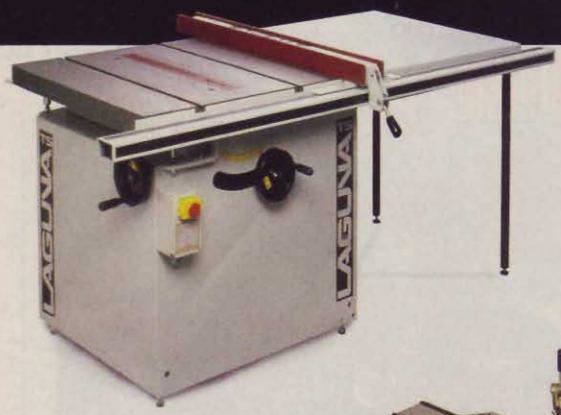

Simply the Best!

Call for FREE Video!

1.800.234.1976

mail@lagunatools.com

The new Laguna TS table saw is setting a new high standard by which all others will be measured. With all the features of a traditional cabinet saw, the TS also comes with its own line of bonus 'Laguna' features.

The X31 multi-task machine has a lineage second to none. This third-generation combination machine is a best seller, with updated fences and increased cutting capacity.

Meet our latest award-winning machine, the LT 14 bandsaw. Packed with outstanding features for powerful performance. 1.7 HP motor - 13 1/4" throat - 1/16" to 1" blade - 8" resaw.

www.lagunatools.com

17101 Murphy Avenue
Irvine, CA 92614

shop tips

Squeeze more room into your drawers

I like to use ball-bearing drawer slides in my cabinet projects because of their super-smooth operation. However, those slides take up space outside the drawer that could be used to expand the size of the drawer.

I put some of that interior room into the drawer by recessing the slides in ¼" grooves on both drawer sides, as shown *below*. That gains me ½" of width in each drawer. I make the grooves about ⅛" wider than the female part of the slide that mounts to the inside of the cabinet. The process works with any drawer side at least ½" thick.

As a timesaving bonus, I no longer have to measure and mark the location of each slide on the drawer. I simply eyeball the slide in the center of the groove, and move the female part out of the way just far enough to drive the first two screws. Then, I remove the female part completely, and drive the rest of the mounting screws.

—Edwin Hackelman, Omaha, Neb.

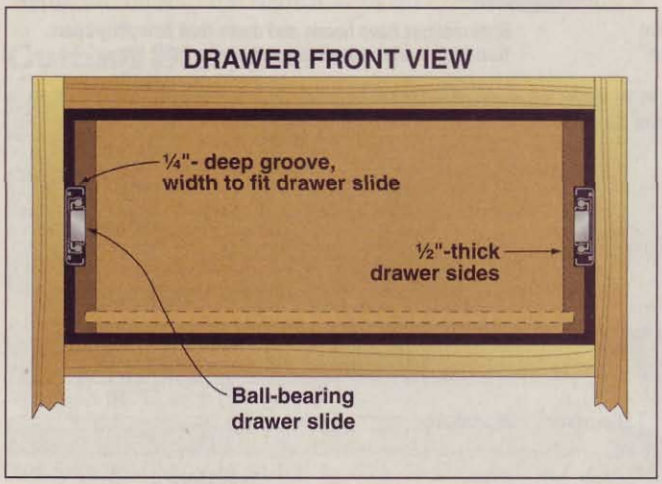

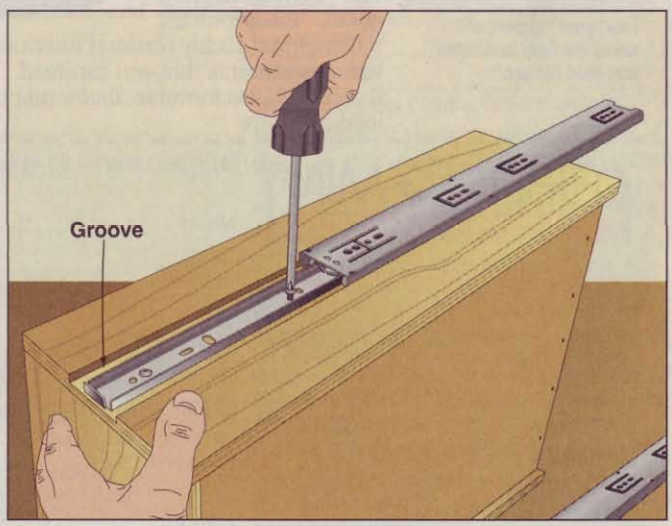

Shift wheel-making into high gear

I was determined to rout a profile around a 2" disk, but equally insistent on keeping all of my fingers firmly attached. So I devised a jig that holds the disk and also has a platform that steadies the router when using piloted bits. I routed an ogee, but you could use a round-over bit and this approach to make wood wheels.

Here's how to build the jig for yourself: Center a 4"-diameter hole in a square piece of ¾" plywood. The drawing, *below*, gives you all the construction details for the support platform, and how you attach the plywood square to it.

To use the jig, clamp its cleat into your vise, and apply a piece of double-faced tape to the jig's hardwood center post to keep the disk from spinning. Secure the disk with a machine screw, and adust your router's depth of cut to produce the profile you want.

—Clifford Loiselle, Largo, Fla.

See a new . . .

...shop tip daily at
www.woodmagazine.com/tips

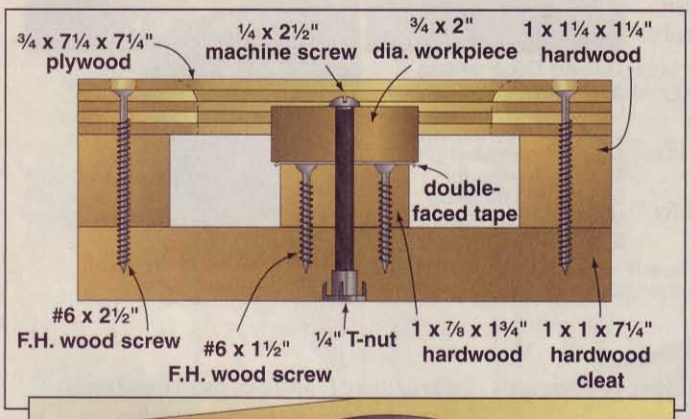
¾ x 7¼ x 7¼" plywood
¼ x 2½" machine screw
¾ x 2" dia. workpiece
1 x 1¼ x 1¼" hardwood
double-faced tape
#6 x 2½" F.H. wood screw
#6 x 1½" F.H. wood screw
¼" T-nut
1 x ⅞ x 1¾" hardwood
1 x 1 x 7¼" hardwood cleat

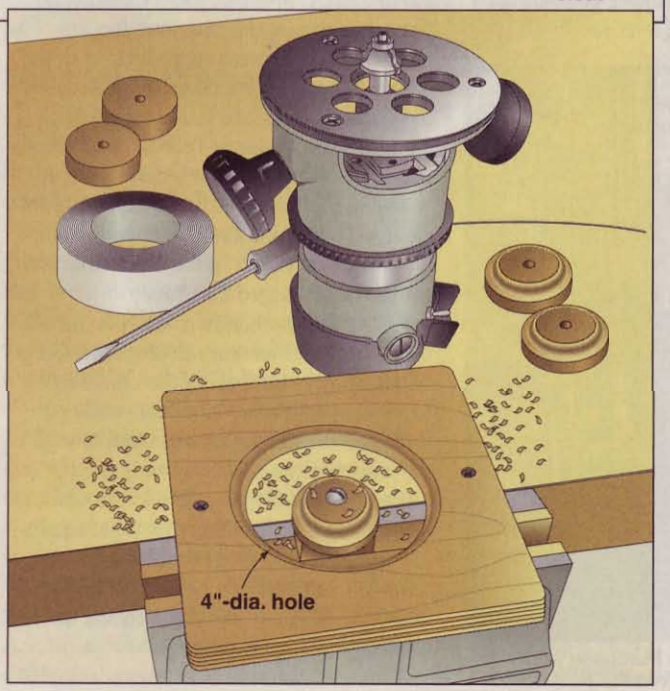

5/8" (16mm)
MYK2
DEWALT®

START HERE

FOR A GREAT FINISH.

C4 carbide teeth are precision ground for an exceptionally smooth finish

Ultra-sharp cutting edges dramatically reduce splintering and tear-out

Heavy-gauge plates are laser cut and precision balanced for accurate cuts and tight joints

Available in several sizes for any woodworking application

INTRODUCING NEW WOODWORKING SAW BLADES FROM DEWALT®

You put a lot into your work. After all, it takes countless hours to complete the perfect project. And when you have the right tools and the right wood, you need the right saw blade. One that's precision balanced for highly accurate cuts. With large, micro-grain carbide teeth for exceptionally smooth finishes. Ultra-sharp cutting edges to reduce splintering. And one that comes in a variety of tooth counts and configurations. DEWALT® Woodworking Blades. We put more into them, so you can get more out of them.

For more information, call **1-800-4-DEWALT** or visit our web site at **www.DEWALT.com**

©2003 DEWALT. The following are examples of trademarks for one or more DEWALT Power Tools and Accessories: The yellow and black color scheme; the "D"-shaped air intake grill; the array of pyramids on the handgrip; the kit box configuration; and the array of lozenge-shaped humps on the surface of the tool.

DEWALT

short cuts

News and notes from the woodworking world

Building a brighter world

While most professional woodworkers specialize in furniture or cabinetry, Charles Lutkus of Dallas, Texas, chose an often overlooked area—lighting. His line includes floor and desk lamps, wall and ceiling fixtures, and a desk that features built-in overhead lighting. All are executed in the Arts and Crafts or Art Deco styles and made from cherry because of its strength, fine end grain, and rich color.

In addition, many of Charles' creations employ art glass to complement the wood and serve as a shade. Dowels and biscuits hold parts together, along with brass hardware. Charles finishes his pieces with clear satin urethane that shows off the cherry while cutting back on distracting glare from the light source.

Selecting lighting as his forte did not come without its challenges. "Dealing with the numerous standards and restrictions laid down by Underwriters' Laboratories proved to be a major hassle, as well as costly," says Charles. "When I started in 1996, the standards were not friendly to wooden light designs. They've since improved. On top of that, I pay $2,000 each year to be registered and updated on the lighting standard changes. Then, every time I create a new design, inspectors pay me a visit and charge an additional $100 to look it over. Develop 10 designs over one year and the costs add up." For more on his unique work, call 972/231-9865 and ask for a brochure.

This Art Deco writing desk (*above*) by Charles Lutkus incorporates overhead lighting with two pull-operated fixtures. It sells for $5,100. His tabletop torchère (*right*) bears a $1,500 price tag.

History-making woodworking

There are your cut-and-dried furniture commissions, and then there are hugely rare and significant furniture commissions that few pro craftsmen ever see.

Photograph: Glade Bilby

Greg Arceneaux's table and chairs, modeled after those of Louisiana Purchase fame, can be found in the Sala Capitular room at the Cabildo in New Orleans' French Quarter.

Covington, Louisiana, master craftsman Greg Arceneaux ranks among the few. His commission: Create a reproduction of the 42"× 15' table on which representatives of the United States and France signed the Louisiana Purchase in 1803 at the Cabildo in New Orleans' French Quarter, along with a complement of historically faithful chairs. The commission stemmed from Greg's involvement in the reconstruction of the fire-damaged Cabildo.

Going only by handwritten specifications from 18th-century documents, Greg went to work, fashioning the chairs from local pecan, and the table from wide imported mahogany planks. And though the commission paid Greg only a little more than $5,000 (he refers to the work as a "labor of love"), the pieces will remain in the public eye for generations.

For more on Greg's work, call him at 985/893-8782, or visit his Web site at www.gregarceneaux.com.

These chairs are animals

New Hampshire craftsman Jeff Cooper describes himself as a "designer of sculptural furnishings in wood," and for good reason. While almost everything he creates serves a functional need, such as a table, chair, or lamp, he doesn't stop there. Jeff applies his artistry to add a whimsical touch by carving, sanding, and finishing functional forms to look like animals. To date, he has made more than 100 such sculptural pieces, using maple, walnut, mahogany, and other woods that suit the need. See more of Jeff's work at www.cooperwoodsculptor.com.

Photograph: Hall Pucket

Jeff Cooper's animal-like chairs sell for $1,500 each, and take 10 working days to complete. His complementary tables go for $800 to $1,500.

Birds declared big winners

Why are all the birdies on Jaybird Street going tweet, tweet, tweet? That's easy. They just found out about the $8,000 check going to the National Wildlife Federation's "Backyard Habitat" program, courtesy of readers who participated in the *WOOD*® and Chevy "For the Birds" birdhouse/bird feeder contest. The money was raised by auctioning contest entries, 271 in all. A heartfelt thanks to those woodworkers who submitted entries, and to those who purchased them.

Editor-in-Chief Bill Krier turned over $8,000 to the National Wildlife Federation for its special program for improving the neighborhood environments where birds live.

SUPERSHOP 10-IN-1 WOOD & METAL SHOP

Own a Complete, PRO-QUALITY WOOD SHOP In Just 12 SQUARE FEET!

Stand-alone machines take TOO MUCH ROOM!

All the QUALITY of premium "stand-alone" shop machines in LESS FLOOR SPACE... and at LOWER COST!

10 TOOLS IN JUST 12 SQ. FT.!

- Equal or **BETTER QUALITY** than one-function shop equipment.
- **COSTS LESS** than buying several one-function machines.
- **10 MOST-USED TOOLS IN 1:** table saw, lathe, drill press, router, sander, more!
- **Rock solid,** 2½ times **MORE MASSIVE** than other combo machines.
- State-of-the-art **ELECTRONIC SPEED** controls, powerful DC motor.
- Perfect for both **HOME & PROFESSIONAL** woodworkers.
- **30-Day RISK FREE** Buy-Back Offer & Industry-Leading Warranties.

Get complete details & SAVINGS OFFER:

ON SALE FOR A LIMITED TIME ONLY!

FREE!

CALL TOLL FREE
1-800-476-4849

Or this Mail to: SuperShop® Dept. WOOD, P.O. Box 1517, Ann Arbor, MI 48106-1517

☐ YES! RUSH me all the details on the HIGH QUALITY, AFFORDABLE alternative for TIGHT SPACE wood shops!

Name _____

Address _____

City _____ State _____ Zip _____

Circle No. 1766

ROCKLER®
WOODWORKING AND HARDWARE

Pre-drilled holes to mount pads, cauls and jigs

Exceptionally stable, just won't tip during glue-ups!

A taller base — no more knuckle knocks...

This isn't your father's pipe clamp!
Introducing the innovative Sure-Foot™ pipe clamp. Code 14004

Circle No. 661

Call or go online to get your FREE catalog today!

1-800-403-9736 -or- rockler.com/go/V4308

3 hot new portable planers

One seeks high performance, one goes for bottom dollar, and the other falls in between.

Since our last review of portable planers (*WOOD*® magazine, issue 148), we've put a lot of wood through three models that were still on the drawing board at the time of that review. The results of these latest trials surprised us in a couple of ways, and when the dust and chips settled, we had a new Top Tool to recommend. Here's how the DeWalt DW735, Grizzly G0505, and Shop Fox W1675 fared.

DeWalt's bold innovation

The most eye-popping of the three is DeWalt's DW735 13" Benchtop Planer (at 92 pounds, it pushes the limits of "portable"). For starters, it doesn't look like any other portable planer on the market. In fact, it functions more like a small stationary planer.

The DW735 (shown *above*) combines two features we praised in our earlier test—dual feed speeds and fan-assisted chip removal—with another not found on any other portable planer: a three-knife cutterhead. This extra knife instantly improves the smoothness of the cut, boosting the number of cuts per inch by 50 percent. The new cutterhead uses self-indexing, double-edged disposable knives—a welcome change from the old single-edge resharpenable blades that require a gauge to set them.

DeWalt engineers probably could have skipped the two-speed stock-feed rate because the surface smoothness created at "dimensioning" rate (96 cuts per inch) is virtually indistinguishable from that at the "finishing" feed rate (179 cuts per inch).

You won't find a cutterhead-locking lever or extension tables on this machine (the table by itself is nearly 20" long), but you won't need either to reduce snipe. An automatic cutterhead lock stabilizes the cutterhead so well that we measured .000" snipe at a 1/16" cut in both oak and pine. It wasn't until we reached a 5/32" depth of cut that snipe became an objectionable .003" deep (both oak and pine).

If the $480 price tag is just too much for you, DeWalt put the same three-knife cutterhead (but ½" shorter) and a few cosmetic changes on its old DW733 12½" planer, and renamed it the DW734. It sells for $380.

DeWalt DW735, $480
www.dewalt.com, 800/433-9258

High points

- Lots of power. It bulldozed through 7"-wide red oak (1/16"-deep cut at "dimensioning" speed) without bogging, divoting, or sniping.
- Automatic cutterhead lock reduces snipe to almost nothing.
- Fan-assisted chip removal works well. Used with a dust collector, less than a cup of chips escaped while planing 180' of 7"-wide oak. Optional "half-bag" system connects directly to a trash can.
- Depth-of-cut gauge runs the length of the cutterhead, so you can measure stock removal anywhere under the cutterhead housing.
- Three-knife cutterhead delivers a super-smooth surface.
- Ample room provided for changing the double-edged disposable knives. Onboard storage of knife-changing tool.

Low points

- It's heavy, weighing 92 lbs.
- At 108 dB, it's louder than any other portable planer we've tested.

More points

- It cuts smoother, and with less snipe, than even the Delta 22-580, the best performer in our most recent test. For this reason, we crown the DW735 as the new Top Tool in portable planers.

Grizzly goes low-dough

At the opposite end of the price spectrum, you'll find the Grizzly G0505. For a 12½"-capacity machine under $200, we didn't expect too much, and from a features standpoint, we were right. Lacking a cutterhead lock, depth-of-cut scale, thickness stops, and dust-collection hood, it's strictly a bare-bones planer.

The surprise came when we started sending wood through the machine. The G0505 delivers a cut smoother than half of the planers in our last planer test, including Grizzly's other portables.

When snipe gets deeper than about .003", the only way to get rid of it is to cut it off, and the G0505 requires that action, with snipe depths averaging .005" and

Continued on page 36

.006", respectively, in oak and pine when taking a 1/16" cut.

Grizzly G0505, $195
www.grizzly.com, 800/523-4777

High points
- It's priced $75 less than the least expensive portable in our previous test.
- Cut quality is much better than you might expect from a planer priced this low.

Low points
- No cutterhead lock results in serious snipe.
- No dust-collection hood available, even as an optional accessory.

More points
- This planer uses double-edged knives, but they're not disposable and require using a gauge (provided) for proper alignment.

Shop Fox's mixed bag

The Shop Fox tools we've tested in the past have always shown some spark of innovation, but the W1675 portable planer, unfortunately, is pretty run-of-the-mill for the price. Its depth-of-cut gauge proved accurate; changing its disposable knives is pretty fast, safe, and simple; and the cut quality is above average.

But snipe depth (.004"–.005") is about the same as the Grizzly G0505. And, the thickness stop, which can be set anywhere along the W1675's 6" capacity, didn't hold well enough to keep from slipping when we cranked down the cutterhead. Shop Fox's Phil Spinelli says they'll put a larger knob on the stop so you can crank it tighter and increase its holding power.

Shop Fox W1675, $420
www.shopfox.biz, 800/840-8420

High points
- Cut quality was above average when compared to planers in this and our most recent test.
- The longest extension tables we've seen in a portable planer, totaling 38½".
- Accurate depth-of-cut gauge.
- Knife-changing tools store onboard.
- Includes dust-collection hood that fits 4" hose.

Grizzly G0505

Shop Fox W1675

Low points
- Thickness stop slips when cutterhead is lowered against it.
- Cutterhead locking handle interferes with power switch operation when locked.
- At 93 lbs, it's heavy.

More points
- Cutterhead crank operates like the blade elevation handle on your tablesaw. However, with the planer on a stand, we found it uncomfortably high to use for large thickness changes.

Think you know pocket hole jigs? Not unless you know the Pocket-Pro!

Meet CMT's Pocket-Pro™ Joinery System

Sure, there are other pocket hole jigs out there - perhaps you already own one - but there's never been a tool like our new **Pocket-Pro™ Joinery System.**

Developed by CMT and woodworking expert Marc Sommerfeld, the Pocket-Pro lets you make rock-solid pocket hole joints in stock from 1/2" to 1-5/8" thick with unprecedented speed, flexibility & accuracy. The heart of the system is our unique molded jig, which features an interlocking 2-piece design. Simply sliding the jig up or down allows you to adjust for stock thicknesses in preset 1/8" increments, without test joints or measurements!

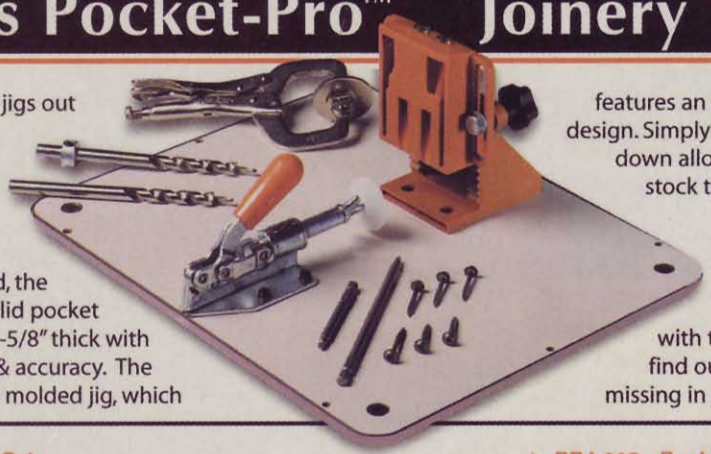

So get acquainted with the Pocket-Pro™, and find out what you've been missing in pocket hole joinery!

✧ PPJ-001 Pocket-Pro Deluxe Set:
Here's the most complete pocket hole set you'll find, You'll get the Jig, Toggle Clamp, Face Clamp, 2 Step Drill Bits, Stop Collar, Drivers, pre-drilled Phenolic Baseplate, Molded Case, Instruction Book and more!

✧ PPJ-002 Pocket-Pro™ Starter Set:
Not just a set for beginners! This is a great upgrade kit for pocket hole "pros" who own another jig. It includes the Jig, Toggle Clamp, Drill Bit, Stop Collar, 6" Driver Bit and Sample Screws.

Circle No. 180

Ask your CMT distributor for the full story about the Pocket-Pro, plus CMT's router bits, blades, shaper cutters and more. Or contact CMT for your free 2003 catalog, and the name of a distributor in your area.

CMT
the only ORANGE one™

888-268-2487 • www.cmtusa.com • CMT USA, Inc. • 307-F Pomona Drive • Greensboro, NC 27407

PORTABLE PLANERS UPDATE: THREE NEW PLAYERS HIT THE STREETS

BRAND	MODEL	MOTOR AMP RATING	CUTS PER INCH (1)	MATERIAL FEED RATE (FEET PER MINUTE) (1)	WIDTH (INCHES)	CAPACITY: THICKNESS (INCHES) MINIMUM	CAPACITY: THICKNESS (INCHES) MAXIMUM	CAPACITY: MAX. DEPTH OF CUT (INCHES) 5"-WIDE BOARD	CAPACITY: MAX. DEPTH OF CUT (INCHES) 12"-WIDE BOARD	CONSTRUCTION: TABLE LENGTH WITH EXTENSIONS (INCHES) (2)	CONSTRUCTION: BLADE STYLE (3)	CONSTRUCTION: CUTTERHEAD LOCK (YES/NO)	PERFORMANCE GRADES(4): CUT QUALITY	PERFORMANCE GRADES(4): LACK OF SNIPE	PERFORMANCE GRADES(4): KNIFE-CHANGING EASE	PERFORMANCE GRADES(4): EASE OF RAISING/ LOWERING CUTTERHEAD	PERFORMANCE GRADES(4): SCALE READABILITY	PERFORMANCE GRADES(4): CUTTERHEAD PARALLELISM (FROM FACTORY)	PERFORMANCE GRADES(4): EXTENSION TABLE ALIGNMENT	PERFORMANCE GRADES(4): THICKNESS ACCURACY/ EASE OF USE	PERFORMANCE GRADES(4): DEPTH-OF-CUT GAUGE	PERFORMANCE GRADES(4): NOISE LEVEL (DECIBELS) (5)	ACCESSORIES(6): STANDARD	ACCESSORIES(6): OPTIONAL	CORD LENGTH (FEET)	WARRANTY (YEARS)	COUNTRY OF ASSEMBLY (7)	WEIGHT (POUNDS)	SELLING PRICE (8)
DEWALT	DW735	15	96/179*	26/14*	13	1/8	6	1/8	1/16	19 3/4*	2D	Y	A	A	A	A	B	A	N/A	D	A	108	C, D, P	G, S, X	10 1/2	1	T	92	$480
GRIZZLY	G0505	15	52	32	12 1/2	13/64	6	1/8	1/16	27 3/8	2R	N	B+	D	C	B	B	A	A	N/A	N/A	102	X	S	7	1	C	77	195
SHOP FOX	W1675	15	67	26	13	7/64	6	1/8	1/16	38 1/2	2D	Y	B+	D	B	C	B	A	A-	D	A	106	D, X	S	8	2	T	93	420

NOTES:

1. (*) "Dimensioning" mode/ "finishing" mode
2. (*) No extension tables.
3. (2D) Double-edged disposable
   (2R) Double-edged resharpenable
4. A Excellent
   B Good
   C Average
   D Below average
   N/A Model does not have this feature
5. Measured 12" above table and 24" in front of planer running under no load.
6. (C) Chip deflector
   (D) Dust-collection hood
   (G) Garbage-can adaptor for dust collection
   (P) 4" dust port
   (S) Stand
   (X) Folding extension tables
7. (C) China
   (T) Taiwan
8. Prices current at time of article's production and do not include shipping charges, where applicable.

Product tester: **John Cebuhar**

Extremely Affordable/Unbelievable Quality
Discover why these European crafted machines from Rojek are fast becoming the tools of choice for America's finest woodworkers.
PK 300V CABINET SAW
• Professional sliding table
• Scoring unit built in
• European riving knife safety
• Superior dust collection
KPS 300 COMBINATION MACHINE
• Table saw/Shaper/ Planer/Jointer/Mortiser
• Choice of sliding tables
• Professional precision & accuracy
• Ideal for small shops & basements
MSP 310M PLANER/ JOINTER COMBINATION
• 12" Jointer & thickness planer
• Fixed jointer tables means no flipping!! Reduced changeover & setup
VDA 316 SLOT MORTISER
• Cut deep mortises with ease
• One-handed 360° operation
• 3.6HP motor & reversing switch
• Over 8" lateral travel
Let us make you a believer! Call toll-free: 800-787-6747
for a lifetime of woodworking
ROJEK
TECH MARK, INC.
Exclusive Distributor in the United States
7901 Industry Dr., North Little Rock, AR 72117
Fax: 501-945-0312 • Website: www.tech-mark.com
COMBINATION MACHINES • SHAPERS • JOINTERS • PLANERS • SLIDING TABLE SAWS • SLOT MORTISERS
Circle No. 1680, 1771

6 must-have router bits

Sure, you can buy a bajillion-bit set, but chances are these half-dozen cutters will do 90 percent of the routing work in your shop.

In the *WOOD*® magazine shop, we have nearly a hundred different router bits to choose from on a daily basis. But in reality, only a handful of them see regular use. Call these bits the "standards," the router bits no woodworker should be without. Regardless of your skill level, these are the six bits we suggest you buy first, and then add others as your skills and budget allow.

Yes, some cuts (such as keyholes) or edge treatments (such as an ogee) would be difficult to do without specialized bits. Buy those when you have a specific need for them.

Incidentally, if your router accepts ½"-shank bits, buy them from the get-go. They cost only a little more than their ¼" cousins, and are less prone to deflection under heavy use.

From the home office, it's the Top Six bit list

⅛" round-over

Hands down, we use this bearing-guided bit the most, primarily for breaking the sharp edges of solid-wood workpieces. The slight round-over softens the edges more uniformly than knocking them down with a sandpaper-wrapped block.

Here's a case where a ¼" shank is perfectly acceptable because the bit removes so little material that it hardly strains. In fact, our ⅛" round-over bit has found a permanent home in a trim router, which accepts only ¼"-shank bits.

¼" round-over

Versatility makes this bit a star performer. It cuts a bullnose (in two passes) in ¾"-thick stock, and works well for shaping trim moldings, which are normally ½" thick. Properly set up in a router table, a ¼" round-over bit can make ½" dowels in any species, or bead the edge of a tabletop. We like to machine ¼" round-overs on the handholds of shop-built jigs and fixtures, making them more comfortable to grip.

½" straight with 1" cutting length

Use this bit in a handheld router for cutting dadoes and slots, or with an offset outfeed fence on your router table to edge-joint boards. We prefer the ½" diameter because we frequently cut dadoes for hardwood plywood when building cases, and two overlapping passes with a ½" bit will form a dado that fits ¾" plywood—actually 23/32" thick—better than a ¾" bit. And, if you rout box joints, ½"-wide fingers look good in ¾" stock.

What about the length? A 1" cutter lets you cut as deep as you're likely to ever need, yet still retracts deep enough into your router base to make shallow dadoes. Longer bits may or may not, depending on the router.

½" flush-trim with 1" cutting length

Solid-wood banding on a plywood shelf stiffens the shelf and hides its ugly edges. Cut the banding oversize, install it, and then trim it with a flush-trim bit to make the joint nearly invisible. Use the same bit and procedure to trim plastic laminate flush after it's installed. We use a flush-trim bit nearly as often for making copies of hard-to-duplicate pieces, such as zero-clearance tablesaw inserts.

45° chamfer

Simple chamfering (cutting a bevel on the edge of a workpiece) makes a good decorative edge treatment for classic furniture styles, such as Shaker and Arts & Crafts. Setup is less finicky than with a round-over bit, and the bearing always guides the bit or workpiece. You can make virtually any size chamfer with one bit—from just breaking an edge to beveling the entire length of a workpiece for a dead-on miter joint—by simply changing the cutting depth.

Continued on page 40

The First Choice of Craftsmen in 90 Countries Around the World.

Circle No. 739

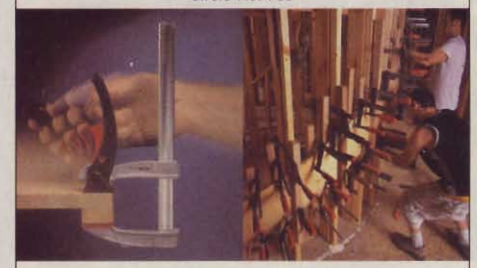

ISO 9001 CERTIFIED

BESSEY®

It's All About the Quality.

Ask for Bessey Clamps across North America wherever fine woodworking tools are sold.

Visit the NEW website at ...

besseyclamps.com

Rabbeting bit with bearing set

Use this bit wherever you need a rabbet along the edge of a workpiece, such as the art-and-glass area of a picture frame, or the inset back of a bookcase. A rabbeting bit also can create the tongue of a tongue-and-groove joint.

Rabbeting bit sets come with a number of various-size guide bearings for cutting different widths of rabbets. These bearings fit on other bearing-guided bits to expand their versatility, as well. For example, an undersize bearing on a ¼" round-over bit makes it a beading bit.

So, should you go with separate bits or sets?

We wish there was a simple answer to that question. Although you can buy mega-sets with all of our recommended bits, no manufacturer packages a set that includes only the six basic bits shown here. We did find several small sets that include four of the six, plus four to ten additional bits. (The missing bits in those smaller sets are the ⅛" and ¼" round-over bits—most bit makers include a ⅜" round-over instead.)

In shopping around, we found we could spend anywhere from $60 to $160 on the six bits individually. The smaller sets, on the other hand, cost about the same or more, but you get the bonus of the extra bits that you may or may not use. Figure the cost per bit of the bonus bits before making your decision. Remember, though, that you'll need to add the cost of the ⅛" and ¼" round-overs to fill out the set.

Flesh out your set

Got more money to spend? Here are the next 10 router bits we advise buying:

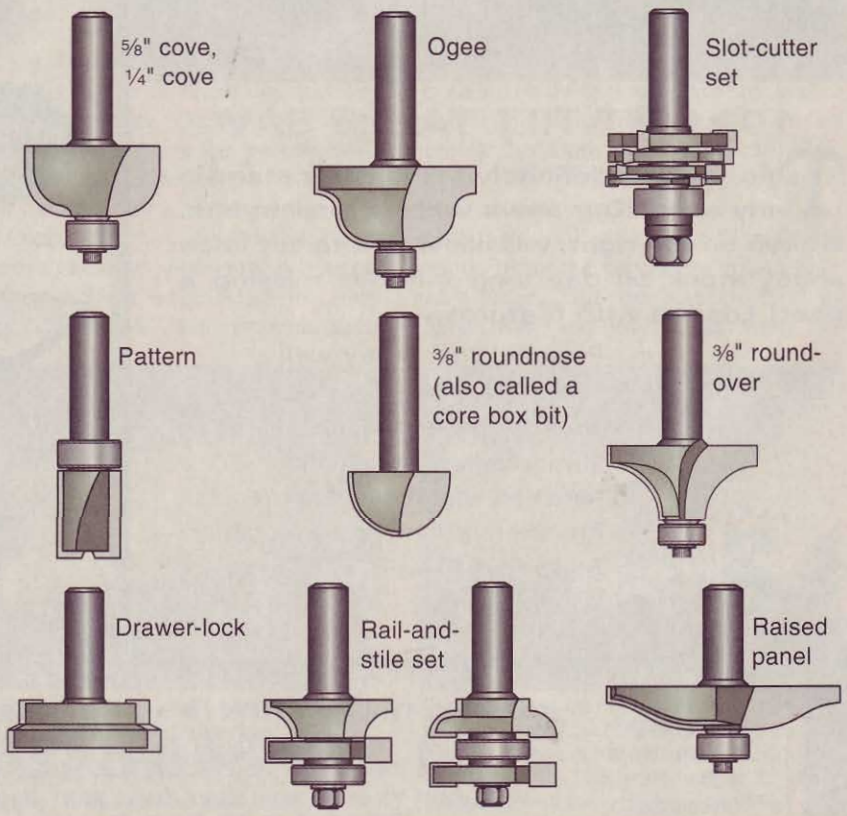

the other red woods

Spice up your projects with a touch of crimson.

Want to add a splash of color to a project? Then check out these four red-hot exotics. Though pricey, they're available, at least in small sizes, from exotic-hardwood dealers and catalogs. Consider using them for unique small projects or as accents on larger ones.

Redheart (***Erythroxylon* spp.**)
This Central American hardwood boasts a bright red color when freshly cut that darkens to deep red over time. The wood features tight, straight grain, making it suitable for turning. It also machines well using carbide-tipped tools, but has a tendency to burn. This wood isn't the easiest to find, and usually sells as turning blanks or in sizes less than 1 board foot. Cost, in spite of the wood's relative scarcity, runs about $10 per board foot.

Chakte kok (***Sickingia salvadorensis***)
Also often referred to as redheart, this more-widely-available wood hails from Central America, as well. Its color ranges from pinkish to bright red, with streaks of purple and brown. Maintaining the wood's vivid colors requires a finish that protects against ultraviolet light, or the wood will fade to a golden tan. Common uses for chakte kok include turning, marquetry, and inlay. Again, expect to pay $10 (or more) per board foot.

Bloodwood (***Brosimum paraense***)
This hard, heavy wood goes by several other names, including cardinalwood and satine. Many describe its color as "strawberry" red, with streaks of gold. Over time, it darkens to reddish-brown. Growing in Central and South America, you may find it difficult to buy, though 1–2' pieces known as "shorts" are available. Expect to pay about $12–$15 per board foot. Bloodwood demands sharp tools and light passes, but yields high luster.

Padauk (***Pterocarpus soyauxii***)
The most common among our crimson collection, African padauk comes in 4/4 and 8/4 thicknesses, lengths up to 8', and sells for $7–$9 per board foot. It starts out red-orange, and darkens to brown over time. See issue 148, page 42, to learn more about this species.

SAWMILL FOR CRAFTSMEN
Priced for Smart Craftsmen

Wood-Mizer is the most famous and respected portable sawmill manufacturer in the world. And it used all its vast expertise to create the compact, functional LT15.

This mill is designed for the part-time sawyer who wants the simplest kind of cutting. While it's the smallest in the Wood-Mizer line, the LT15 offers the same quality construction seen on our biggest mills.

Don't continue paying top dollar for less than top-notch results. Cut your own boards with the most trusted name in sawmills: Wood-Mizer.

1.800.553.0182
1.877.866.0667 (In Canada)
www.woodmizer.com

TRUST.
Wood-Mizer®
WM903S1C

The challenge: Create a one-car-garage shop equipped with loads of tools and lots of smart storage at an affordable price. The result:

Idea Shop 5

Rearranging the wall components is just about effortless. We changed from the original configuration at top to this one in less than 20 minutes.

When we designed the shop you see here, we used the key words shown around the perimeter of the logo, *above*, to guide us. In a nutshell, we wanted to create a full-featured shop in a compact space. We started with a third stall of a 3-car garage, *opposite page top*, a feature found in many newer homes. Then we went to work.

Of course, you may not have this type of garage at your house. That's okay. Wherever you place your shop, we know you'll find a whole world of great ideas in this one that you can easily put to use.

As the floor plan on the *following page* shows, our design incorporates all of the major tools needed for a complete woodworking shop into this 15×22' space. Plus, the shop offers ample storage space, work surfaces that double as bases for benchtop tools, and a serious dust-collection system. Beyond that, almost everything in the shop is mobile.

Let's take a closer look at what makes Idea Shop 5 tick, and at the projects we'll be bringing you in this and upcoming issues. You can check out a list of the tools and supplies we used on *page 8*. See *page 46*, also, to learn how we could help you revamp your workshop. It's an opportunity you won't want to miss.

Keep it simple, make it affordable

You may have noticed that all of our shop fixtures share a similar look. Sure, that consistency makes for a great appearance, but the real reason for their resemblance lies in our goal to make them as easy and affordable as possible to build. The workbench bases, flip-top cabinets, and router-table base, for

example, are essentially identical in construction. Master building one, and you quickly can create them all. The same holds true for the wall cabinets—three sizes, one basic design.

We built almost everything from three materials: medium-density fiberboard (MDF), medium-density overlay (MDO) plywood, and soft maple. You'll find these durable, inexpensive, materials in home centers. Add simple hardware and an easy-to-renew clear finish, and you get high function on a low budget.

Go mobile to get versatile

These fixtures aren't just easy to build, they're a cinch to move around. Equipped with heavy-duty casters, shop-built mobile bases, shown on *page 12*, allow you to place the tools you need at center stage, push others out of the way against a wall, and lock everything securely in place. This makes the shop function like a much-larger space.

We discovered, too, that shop fixtures don't need wheels to be mobile. All of the wall cabinets, clamp racks, and the perforated-hardboard tool-storage board quickly slip onto and off of a simple but secure cleat system mounted to the walls. Why? For one, it makes mounting these items a snap, even for one person. Also, the system allows you to easily reconfigure the entire shop as your needs change. Compare the opening photo, *left*, with the one inset below it.

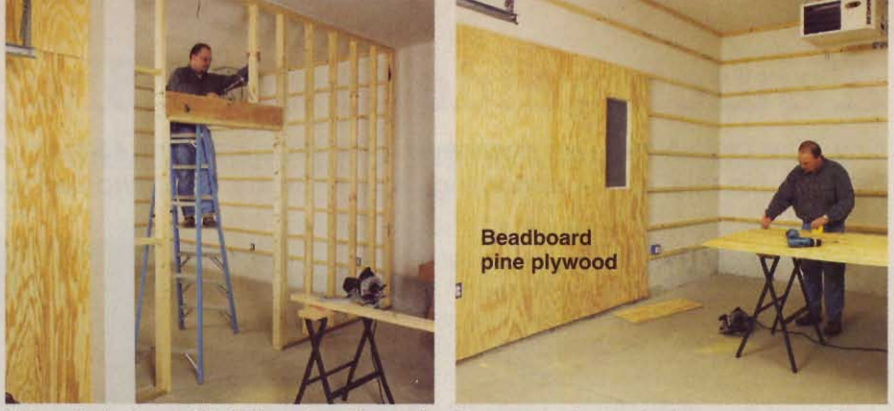

We walled off one 15×22' bay from the rest of the garage to create shop space, and then covered the drywall with a more durable, attractive surface: beadboard pine plywood.

Finishing touches

In addition to being functional and affordable, we wanted Idea Shop 5 to be comfortable and attractive.

As the shop-construction photos, *above*, show, we added ⅜" beadboard plywood panels over the existing drywall. This attractive material completely transforms the shop's atmosphere, and makes a sturdy anchorage for wall-mounted accessories. In addition, the extra layer helps deaden noise.

We painted the floor using a water-based epoxy that's tough as nails and easy to sweep clean. See *page 72* to learn how to coat your floor, even if it's been around a while.

Ceiling-mounted fluorescent lights cost little to install, run economically, and provide great light. Task lights brighten areas in need of more-intense illumination.

Also mounted out of the way on the ceiling, a natural-gas heater makes the shop cozy during cold months. It pulls combustion air in from outside, so we never worry about fumes or dust causing a spark hazard.

Take a virtual shop tour

Want to walk around Idea Shop 5? Just head for WOOD Online, and you'll be transported to the middle of the shop, where you can get a 360° view. You can zoom in to check out the projects and tools in more detail. While you're there, check out Idea Shops 1 through 4, too.

http://www.woodmagazine.com/ideashops

Idea Shop 5 Floor Plan and Project Guide

Use the numbered list, below, to see where we placed a dozen great shop projects that we'll show you how to build. The lettered list guides you to all of the major tools.

Projects

1 Wall cleat system
2 Workbench
3 Wall cabinet
4 Tool-storage board
5 Clamp rack
6 Mobile drawer cabinet
7 Sanding center
8 Lamp holder
9 Mitersaw station
10 Flip-top cabinets
11 Tablesaw/routing center
12 Mobile base

Tools

A Air compressor
B Cyclone
C Drill press
D Bandsaw
E Oscillating sander
F Drum sander
G Lathe
H Floor sweep
I Lumber rack
J Mitersaw
K Jointer
L Dust collection duct
M D.C. muffler/filter
N Air filter (on ceiling)
O Planer
P Mortiser
Q Tablesaw
R Router & Fence

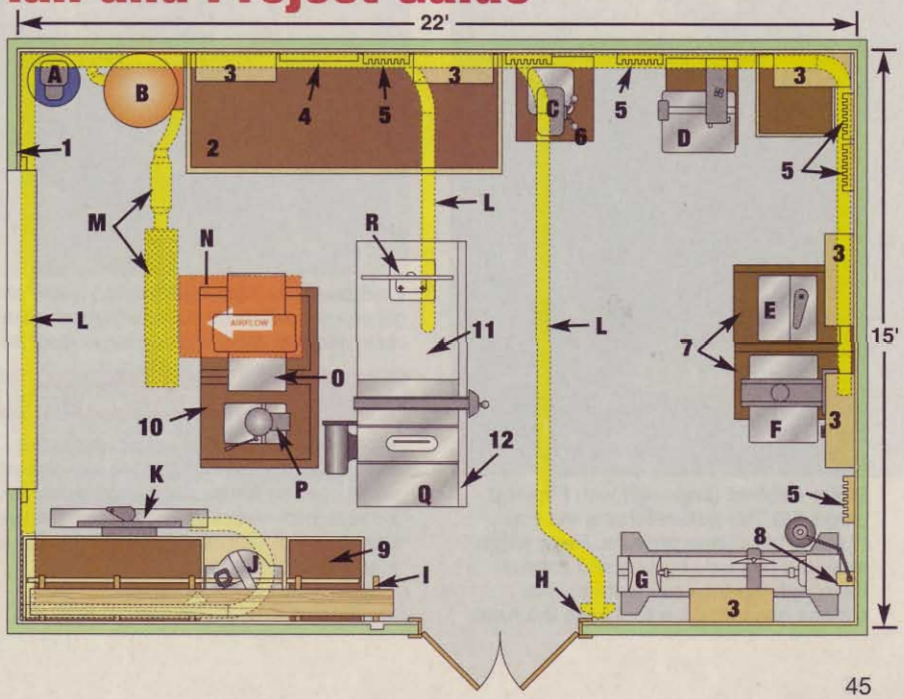

A quick guide to Idea Shop 5 projects

Now that you've seen an overview of the shop, read on to learn more about the project plans we'll bring you in this, and in upcoming, issues. Build one or two and your shop will work better than ever.

In this issue...

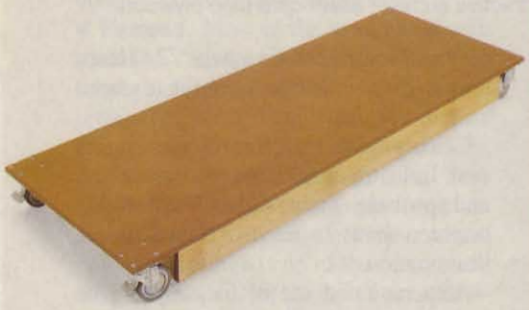

Easy-mover mobile base (*page 12*) This simple-to-build rolling platform offers sturdy support under any tool. We'll show you how to size and build one, no matter what size you need.

Tablesaw/router station (*page 62*) This do-it-all work center combines a table-mounted router and a contractor's tablesaw in one package. Both bases feature built-in storage, as well as dust-collection. Plus, the whole setup rolls easily around the shop. Both the saw and router table sit on modified versions of our "basic cabinet" (described, *below left*).

Basic cabinet (*page 48*) with **Flip-top (*page 52*)** This cabinet forms the core of many Idea Shop projects. Here, we've mounted two side by side and capped them with flip-tops to create a work surface one minute, a tool base the next.

Workbench top (*page 56*) A top made of two layers of MDF banded with maple provides a generous workbench surface that can stand up to years of hard use. It's perched atop two basic cabinets (built with the leg option) that house loads of tools and shop supplies.

Does your shop need a redo? We want to help!

WOOD® magazine is looking for a reader's shop that's in need of a work over. Interested? Then take a few photos of your shop (no more than five, please), sketch the floor plan, and tell us (in 200 words or less) why we should select your shop. Include your name, full address, telephone number, and e-mail address. Send it all to:

Workshop Work Over, WOOD magazine,
1716 Locust St., GA-310, Des Moines, IA, 50309-3023.

If you're selected, we'll come to your shop, armed with up to $1,000 and a bunch of great ideas, and help you pull off a low-dough work over of your workshop in just two days. We'll photograph the process, and then feature the adventure in an upcoming issue.

We need to receive your entry by no later than November 17, 2003. If we choose your shop, we'll notify you by December 15, 2003. All entry materials are non-returnable.

In November 2003...

Sanding center One side of this cabinet provides sturdy support for an oscillating spindle/belt sander. Flip that tool down, and the surface serves as outfeed support for a drum sander. When not using either, roll the whole thing out of the way. Components: a basic cabinet and flip-top, a mobile drawer cabinet (shown *below*), and a mobile base.

Mobile drawer cabinet With built-in storage and swiveling casters, this cabinet offers great support for a drill press, as shown, or any number of benchtop tools. Ingenious, inexpensive drawer hardware combines with basic-cabinet construction techniques to make it easy as pie to build.

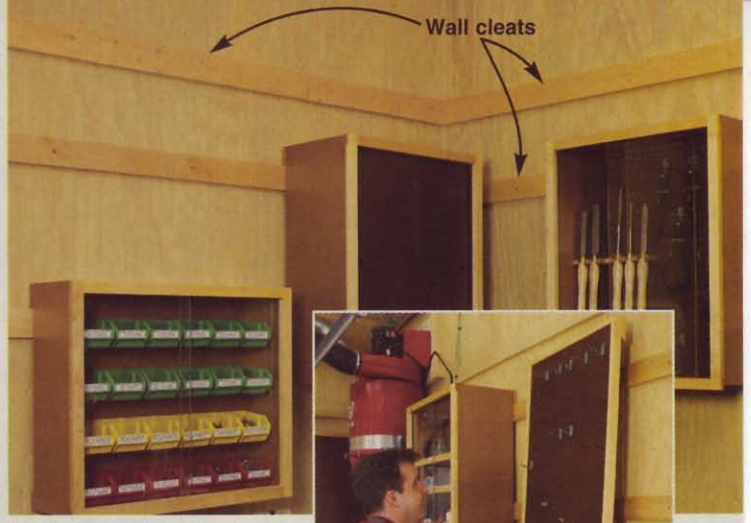

Modular wall system It all starts with clever cleats that are beveled at 45° along their top edge. Mounted securely to the walls, these cleats form the backbone of a versatile cabinet and accessory storage system. All the components interlock with the cleat making them easy to hang and a cinch to reconfigure. The storage components include: three styles of cabinets that share a common design, clamp racks, and a super-easy tool-storage board. With this setup, you'll have no excuse for not having a completely organized shop.

In December 2003...

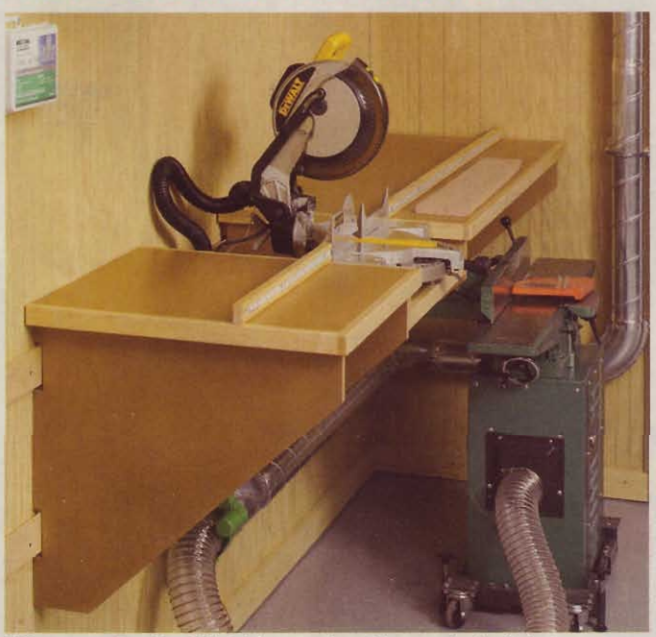

Mitersaw Station With big, sturdy tables and a built-in fence system, this setup aids making dead-on cuts. Our design makes it easy to custom-fit the station to most any mitersaw, while the wall-cleat system (see *above right*) makes it easy to mount.

In March 2004...

Drill-bit organizer Keep all of your drilling accessories organized and protected with this quick-to-make drawer insert. Once you know how to build the basic unit, you'll find uses for it in many of your shop's drawers, too.

In May 2004...

Lamp holder Here's yet another great accessory for our wall cleat system. This handy holder positions a swing-arm lamp where you need it for task lighting. No cleat system on your walls? No problem. Build the holder as is, and make up a few short sections of cleat so that you can use one lamp in many locations in your shop.

build the basic cabinet

It's at the heart of Idea Shop 5's floor-cabinet system.

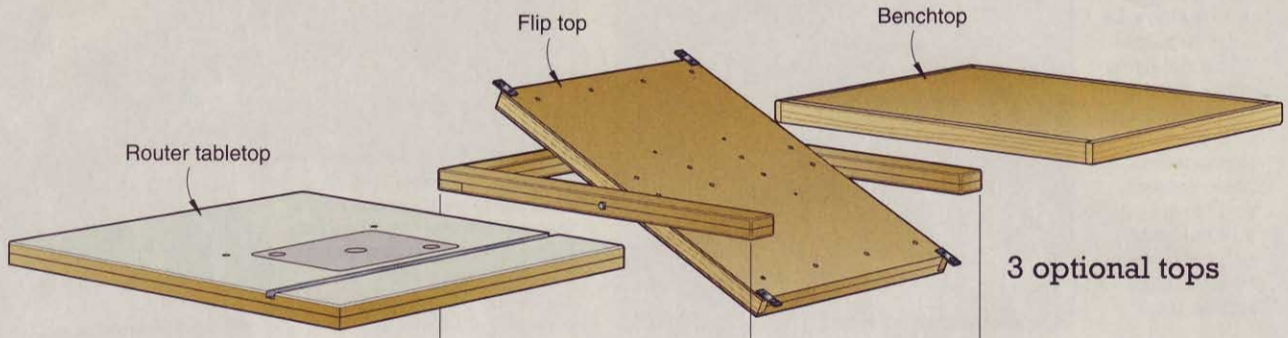

Mobile sawing/routing center, see *page 62*

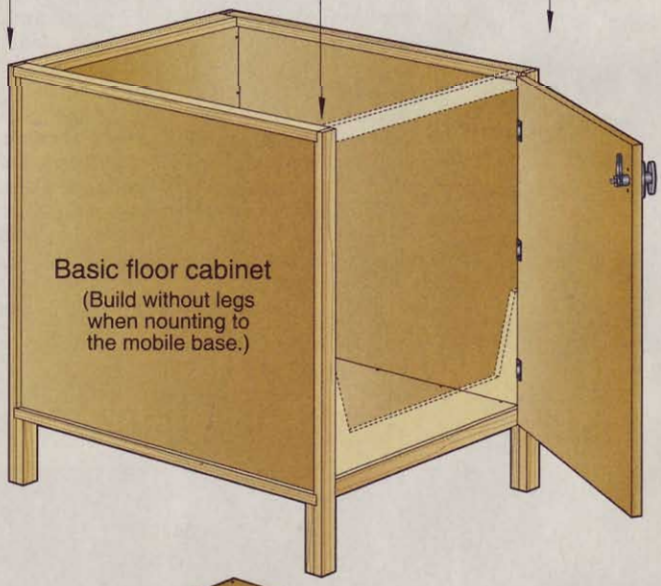

Workbench, see *page 56*

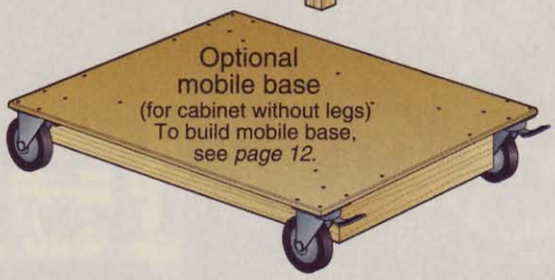

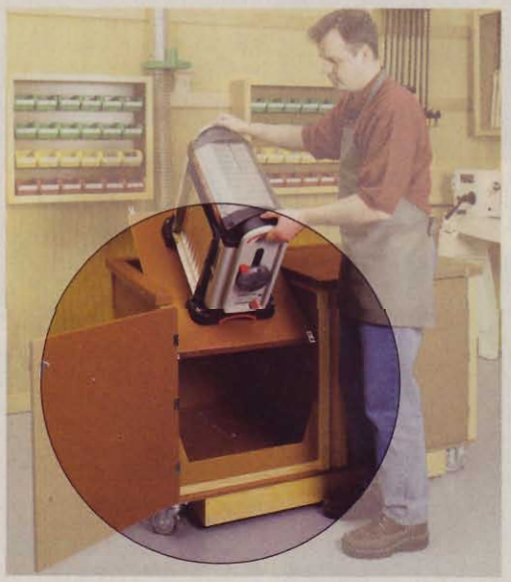

Flip-top work center, see *page 52*

WOOD MAGAZINE'S IDEA SHOP 5

Floor Cabinet System

3-drawer cabinet, see November 2003 issue

1 CABINET WITH LEGS
EXPLODED VIEW

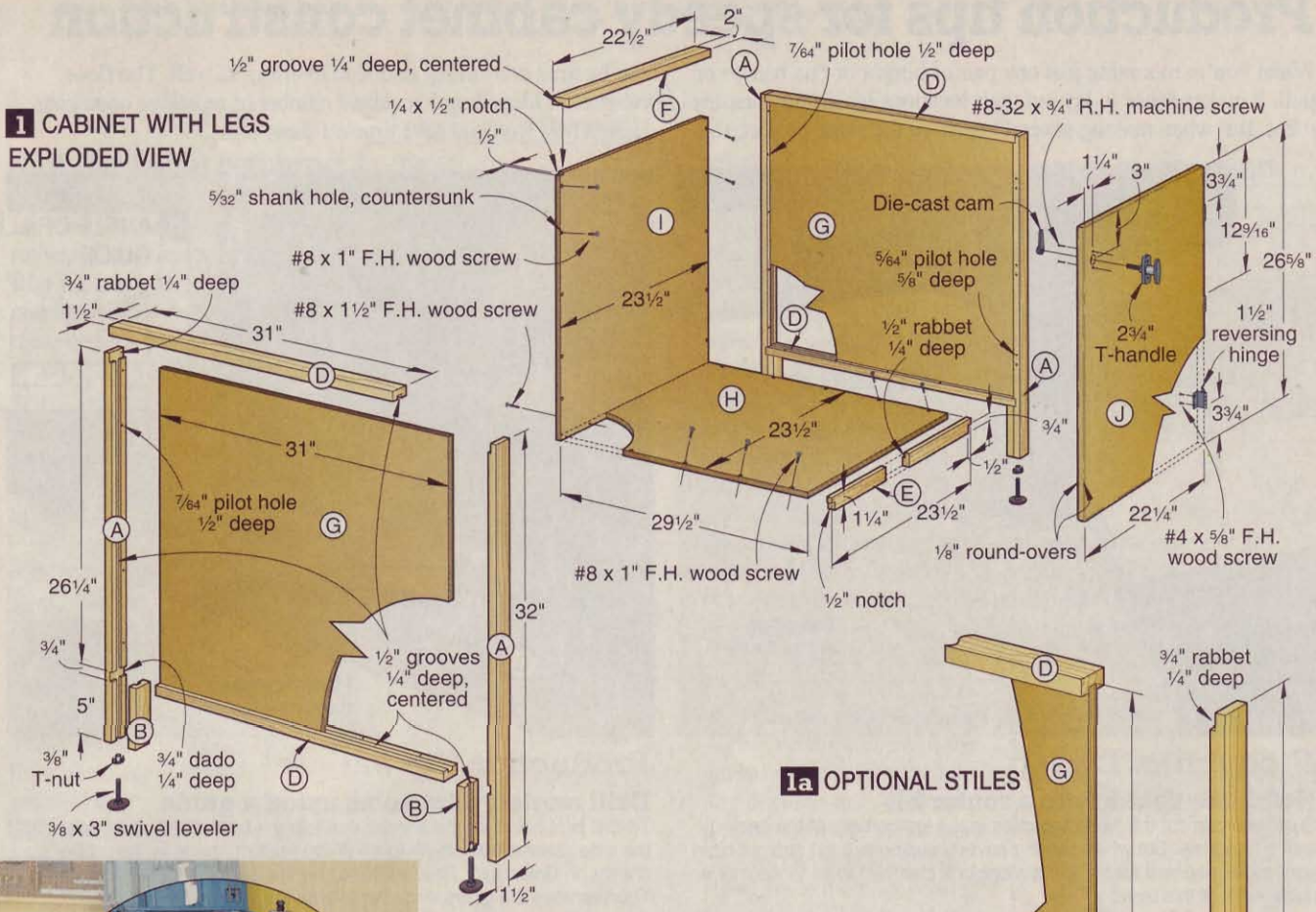

1a OPTIONAL STILES

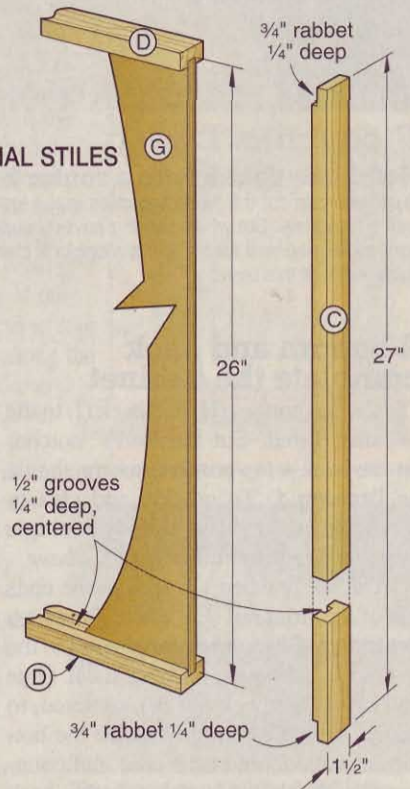

Note: For a cabinet without legs, part (C) replaces parts (A) and (B).

2 DOOR SECTION VIEW

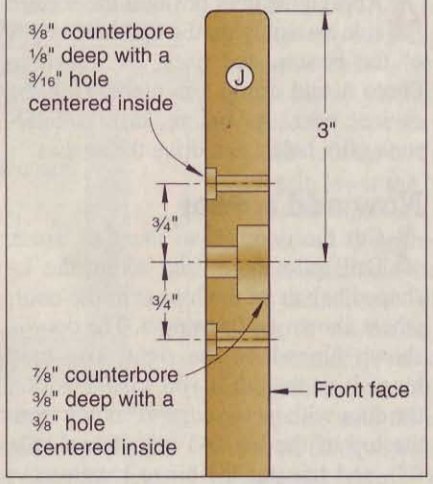

Inexpensive materials, easy joinery, and flexibility describe this sturdy workshop floor cabinet. In the photos here, you'll find two versions: one with legs and adjustable levelers, and the other without legs that mounts on a mobile base. We suggest looking over these prior to building anything.

If your interests lie in making several cabinets in the system, check out the production tricks in the sidebar on *page 50*. You'll find lots of ways to save time.

Start with a pair of side assemblies

1 To make the cabinet *with* legs, cut the legs (A) and leg cleats (B) to the sizes listed in the **Materials List**, *or* for the cabinet *without* legs, cut the optional stiles (C) to the size listed. Then cut the side rails (D), front rail (E), and the back rail (F) to size.

2 With a dado blade adjusted to match the width of your ½" plywood, cut the ¼"-deep rabbet in part E, where shown on **Drawing 1**. Then cut centered grooves in parts A and B (or C), D, and F, where shown on **Drawing 1** or **1a**.

3 Switch to a ¾" dado blade, and cut the rabbets and dadoes in the legs (A), where shown on **Drawing 1**, or the rabbets in the stiles (C), where shown on **Drawing 1a**. Finish-sand all the parts to 180 grit, and set the front rail (E) and back rail (F) aside.

4 Cut the side panels (G) to the size listed. Glue and clamp the legs and rails or the stiles and rails to the panels. For the cabinet with legs, glue and clamp the leg cleats (B) to the legs (A), where shown on **Drawing 1**.

Production tips for speedy cabinet construction

When you're mounting just one pair of hinges or one handle or pull, it makes sense to lay out their locations by simple measurement. But when making several copies of the same project, this can be time consuming and lead to errors as well. The floor cabinets in Idea Shop 5 require a number of repetitive operations. Here's how you can save time on these tasks.

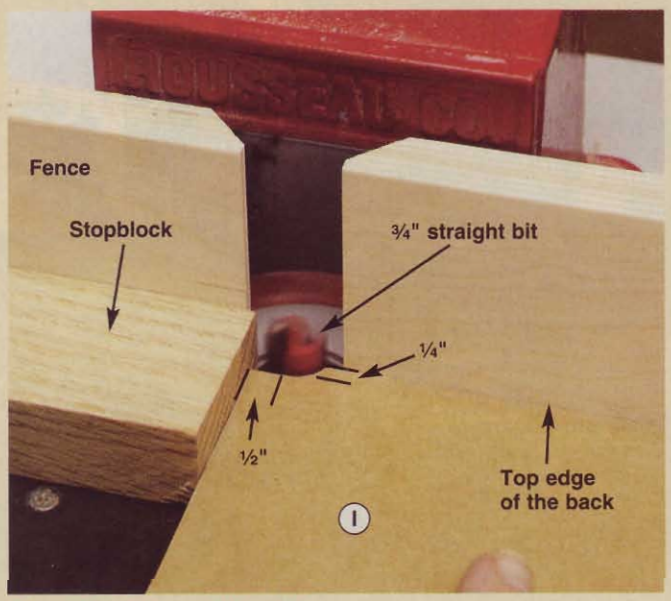

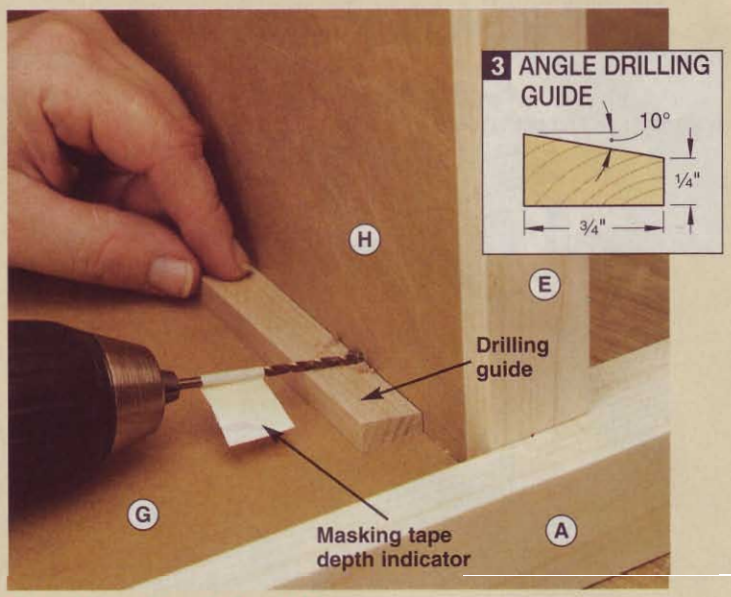

Production Tip #1:

Notch the backs with a router bit

Sure, you can cut the ¼×½" notches in the top corners of the back (I) with a handsaw. But when making several cabinets, a ¾" straight bit in your table-mounted router and a stopblock clamped to its fence make quick work of this task.

Production Tip #2:

Drill angled pilot holes using a guide

To drill pilot holes for the screws that join the bottom (H) and back (I) to the side assemblies, bevel-rip an 8"-long drilling guide to the profile shown on **Drawing 3**. Resting the bit on the guide, drill the pilot holes. Then remove the guide and countersink the holes.

A bottom and back complete the cabinet

1 Cut the bottom (H) and back (I) to the sizes listed. Cut the ¼×½" notches on the back's top corners, where shown on **Drawing 1**. To quickly and cleanly notch the backs when making multiple cabinets, see **Production Tip #1**, *above*.

2 Cut ½" notches ¾" deep in the ends of the front rail (E), where shown on **Drawing 1**. Glue and clamp the rail to the bottom (H), keeping the ends flush. Glue and clamp the back rail (F), centered, to the back (I). Clamp the back to the bottom as shown, and drill pilot and countersunk shank holes through the back and into the bottom. Drive the screws.

3 Place the first side assembly flat on a horizontal surface. Squeeze a bead of glue on the side panel along the rear leg or stile and the lower side rail. Place the back/bottom assembly (E/F/H/I) on the side assembly, and clamp it in place. Drill countersunk pilot holes through the bottom and back and into the rear leg or stile and the lower side rail, and drive the screws. To quickly and accurately drill these angled pilot holes, see **Production Tip #2**, *above*.

4 Apply glue, and position the second side assembly on the upturned edges of the bottom and back, as shown in **Photo A**, and clamp it in place. Turn the cabinet over. As before, drill countersunk pilot holes, and drive the screws.

Now add a door

1 Cut the door (J) to the size listed. Drill pilot holes and screw the L-shaped halves of the hinges to the door, where shown on **Drawing 1**. The door is shown hinged on the right; you may hinge it on the left if you wish. Position the door with its top edge ¼" down from the top of the leg (A) or optional stile (C), and transfer the hinge locations to the cabinet. Remove the hinges from the door, position them on the leg or stile, and mark and drill the pilot holes. For speedy and accurate hinge installation, see **Production Tip #3**, *above right*.

2 To install the T-handle, mark the center of the ⅞" counterbore on the front of the door at the upper corner opposite the hinged edge, and the ⅜" counterbores on the back, where dimensioned on **Drawings 1** and **2**. Using Forstner bits, drill the counterbores. Then using your drill press, drill the holes centered in the counterbores. To save repetitive layout time and increase accuracy when installing several handles, see **Production Tip #4**, *above right*.

3 Rout ⅛" round-overs along all the door's edges, *except* the inside edge on the hinged side. Finish-sand the door.

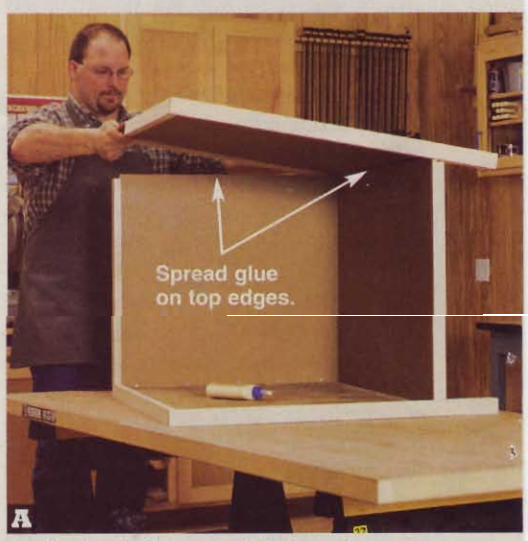

Apply glue to the upward-facing edges of the bottom and back panels. Lower the second side assembly into place.

Production Tip #3:

Position the hinges perfectly

Make the jig shown on **Drawing 4**. Mark "Top of Cabinet" and "Top of Door," where shown on **Drawing 4a**. Align the end marked "Top of Cabinet" with the top of the leg (A) or the optional stile (C), and clamp it in place. Position the hinges in the jig's dadoes, and drill pilot holes, as shown in the photo, *below left*. Now, place the door inside face up. Capturing the hinges in the jig's dadoes, align its "Top of Door" mark with the door's top edge. Clamp the jig to the door, and drill the pilot holes, as shown in the photo, *below right*.

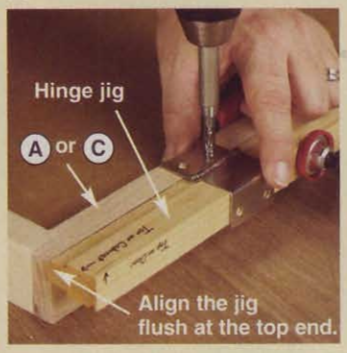

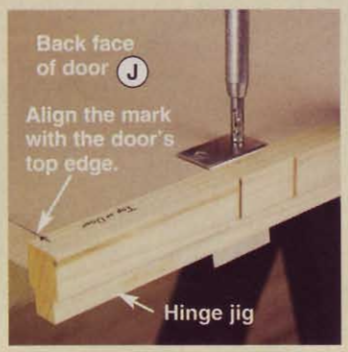

Production Tip #4:

Mount the T-handles dead-on

Make the drilling guide shown on **Drawing 5**. Clamp the guide to the door's front face on its upper corner opposite the hinges. Drill the ⅞" counterbore marked "F" on the jig. Flip the door, reposition the jig on the back, and drill the ⅜" counterbores marked "B."

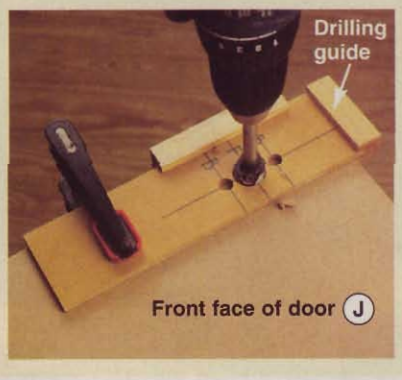

4 DOOR HINGE JIG

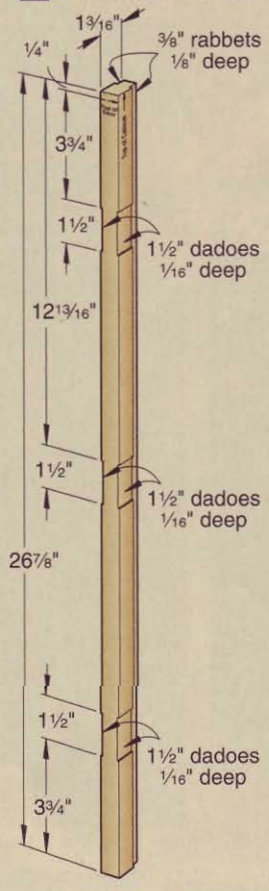

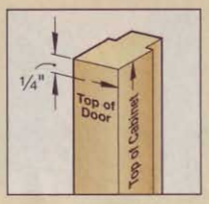

4a JIG MARKING DETAIL

5 T-HANDLE DRILLING GUIDE

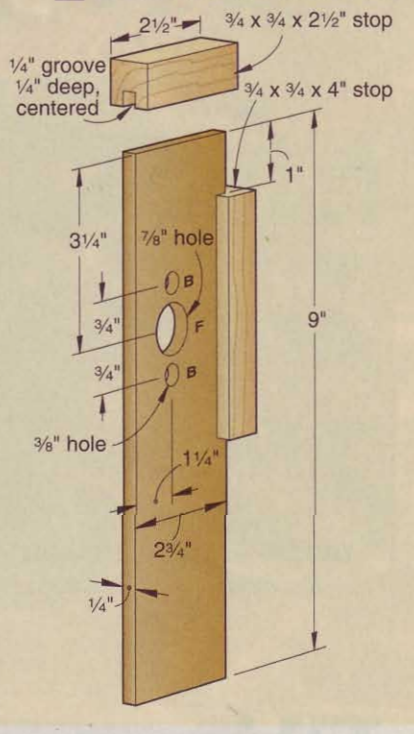

Install the hardware

1 For a cabinet with legs, lay the cabinet on its back, center the T-nuts in the channel formed by the mating grooves in the legs and leg cleats, and hammer them in place. Screw in the levelers.

2 Secure the T-handle to the door with #8-32×¾" roundhead machine screws. Slide the cam over the handle's shaft, position it snug against the door, and tighten the setscrew. Trim the protruding shaft with a hacksaw.

3 Fasten the hinges to the door, and then to the cabinet's leg (A) or optional stile (C), with #4×⅝" flathead wood screws.

4 To outfit the basic cabinet for its desired use, see the articles cited with the four opening photos.

Written by **Jan Svec**
Project design: **Jeff Mertz**
Illustrations: **Roxanne LeMoine**

Cutting Diagram

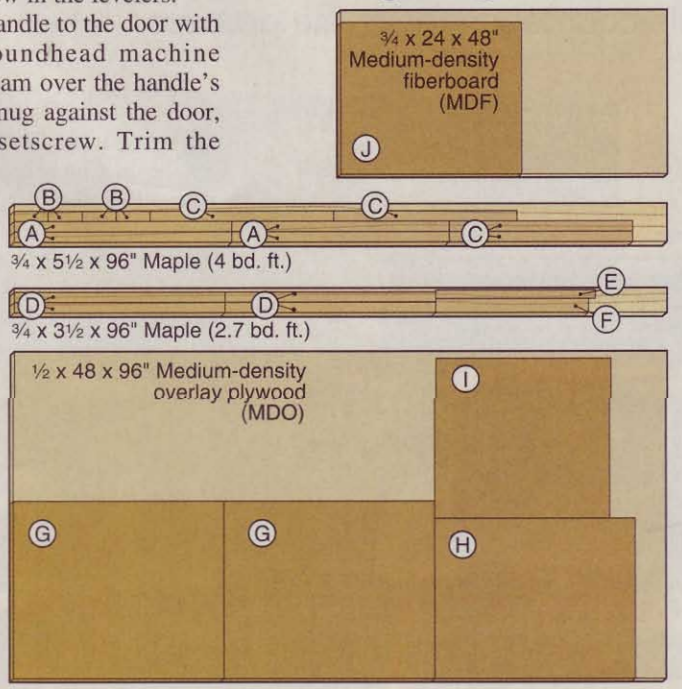
¾ x 24 x 48" Medium-density fiberboard (MDF)
J
B B C C A A C
¾ x 5½ x 96" Maple (4 bd. ft.)
D D E F
¾ x 3½ x 96" Maple (2.7 bd. ft.)
½ x 48 x 96" Medium-density overlay plywood (MDO)
I
G G H

Materials List

Part	FINISHED SIZE T	W	L	Matl.	Qty.
A legs	¾"	1½"	32"	M	4
B leg cleats	¾"	1½"	5"	M	4
C optional stiles	¾"	1½"	27"	M	4
D side rails	¾"	1½"	31"	M	4
E front rail	¾"	1¼"	23½"	M	1
F back rail	¾"	2"	22½"	M	1
G side panels	½"	26"	31"	MDO	2
H bottom	½"	23½"	29½"	MDO	1
I back	½"	23½"	25¾"	MDO	1
J door	¾"	22¼"	26⅝"	MDF	1

Materials key: M–maple, MDO–medium-density overlay plywood, MDF–medium-density fiberboard.

Supplies: #8×1", #8×1½", and #4×⅝" flathead wood screws; #8-32×¾" roundhead machine screws; solid stock and ¼" hardboard for the T-handle and hinge jigs.

Blades and bits: Stack dado set, ⅛" round-over router bit, ⅜" and ⅞" Forstner bits.

Buying Guide

Cabinet without feet. 1½" reversing hinges no. 00H37.50, $1.30 per pair (2 pairs); 2¾" T-handle no. 00G52.10, $4.90; die-cast cam no. 00G50.15, $1.00. Lee Valley Tools Ltd. Call 800/871-8158 or go to www.leevalley.com.

Cabinet with feet. Add the following items to the list above: ⅜" 6-prong T-nuts no. 00N22.26, $1.30 for a pack of 10; ⅜×3" swivel levelers no. 01S06.03, $1.45 (4).

WOOD MAGAZINE'S IDEA SHOP 5

Floor Cabinet System

Just swivel the turn buttons...

...rotate the tool attached to the flip panel...

Flip-top work center

Now you can store benchtop tools in a jiffy, and create valuable counter space in the process.

What fits on the work center?

With all its parts retracted for storage, the tool's footprint must be slightly smaller than the 21 13/16×29 3/8" flip panel *and* fit within the radius shown on the drawing, *right*. We recommend that the tool weigh a maximum of 125 pounds and that it be centered on the panel.

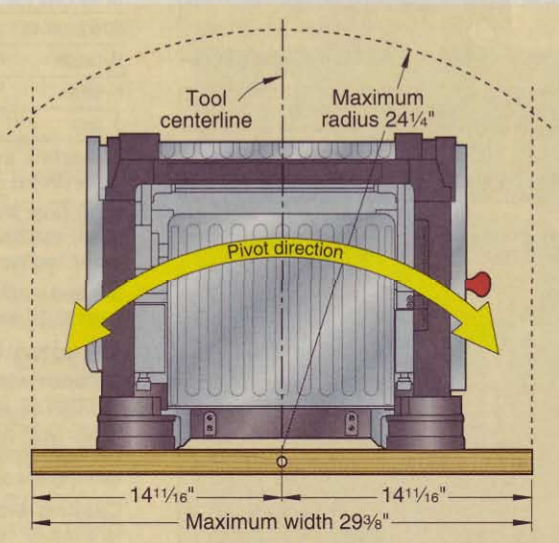

It's no news that benchtop tools take up benchtop space, even when not in use, and that horizontal surfaces for assembly, finishing, or just tinkering are premium real estate in the shop. This ingenious cabinet lets you have benchtop tools without giving up your benchtop.

Note: The following instructions show you how to build a single flip-top cabinet. To build the twin cabinets shown, simply double the number of parts on the ***Materials List****, and see "Create a dynamic duo" on* page 55.

Start with a basic cabinet

For this mobile-base cabinet, start by building a basic cabinet *without* legs, using the instructions on *page 48*.

...and get to work.

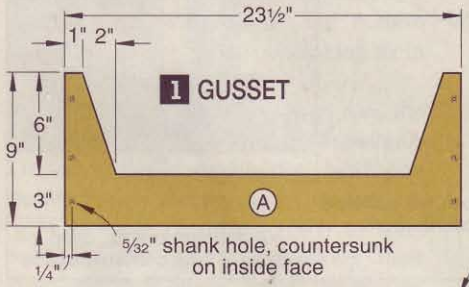

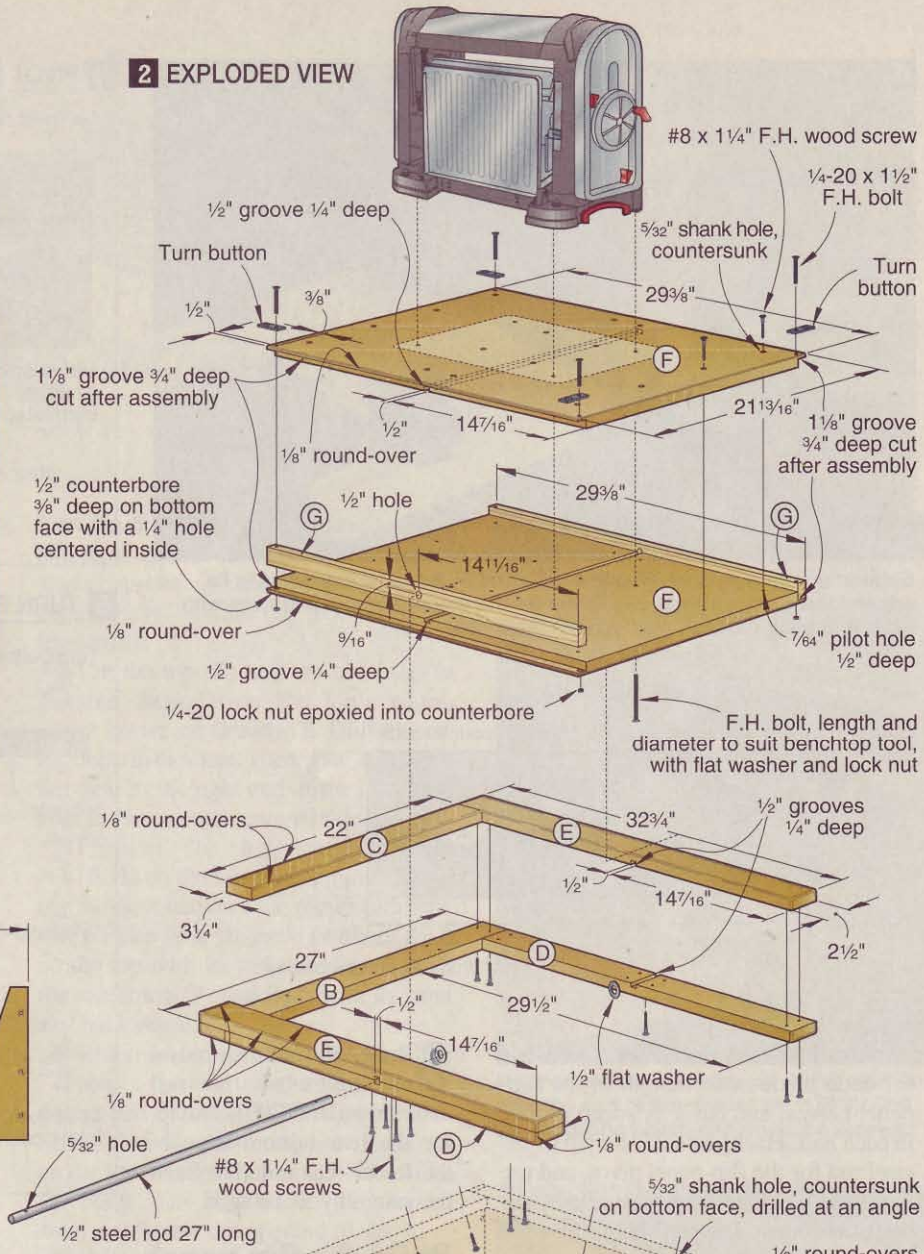

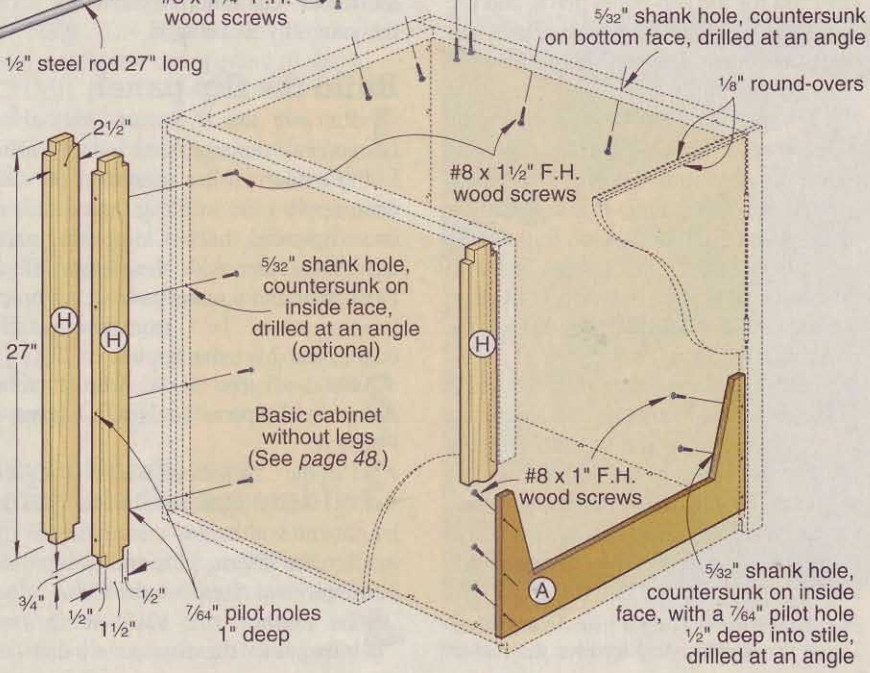
5/32" shank hole, countersunk on bottom face, drilled at an angle
⅛" round-overs
2½"
#8 x 1½" F.H. wood screws
5/32" shank hole, countersunk on inside face, drilled at an angle (optional)
H
H
H
27"
Basic cabinet without legs (See page 48.)
#8 x 1" F.H. wood screws
A
5/32" shank hole, countersunk on inside face, with a 7/64" pilot hole ½" deep into stile, drilled at an angle
¾"
½"
1½"
½"
7/64" pilot holes 1" deep

2 From ½" MDO plywood, cut the gusset (A) to the shape shown on **Drawing 1**. Clamp it to the inside edges of the cabinet's front stiles, where shown on **Drawing 2**. Drill countersunk screw holes through the gusset and into the stiles. Drive the screws.

Next, the rail assembly

1 Cut the lower rear rail (B), upper rear rail (C), lower side rails (D), and upper side rails (E) to the sizes listed on the **Materials List**. Lay out the rails in the U-shaped configuration shown on **Drawing 2**. Mark the front ends of the four side rails with masking tape, and draw arrows to indicate the mating faces.

2 Cut two 21¹³⁄₁₆×29⅜" pieces of ¾"-thick MDF for the flip panel (F).

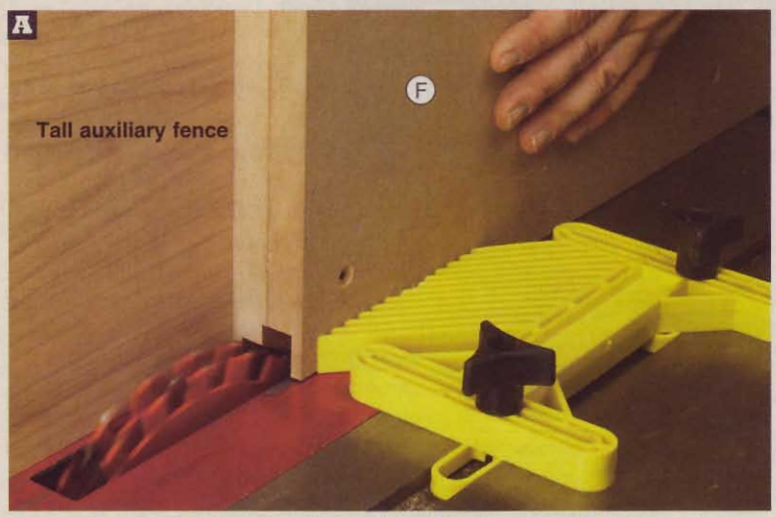

Supporting the flip panel (F) with a tall auxiliary fence, cut grooves in its edges for the edge inserts (G). To center the grooves, make one pass with each of the flip panel's faces against the fence.

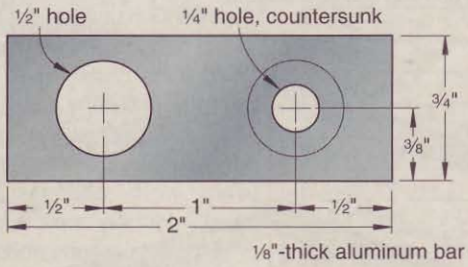

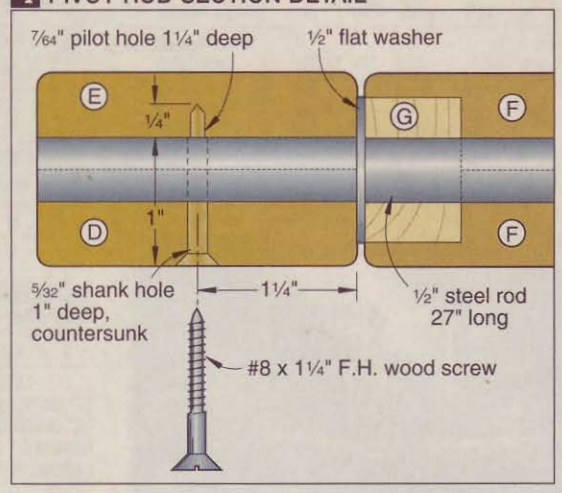

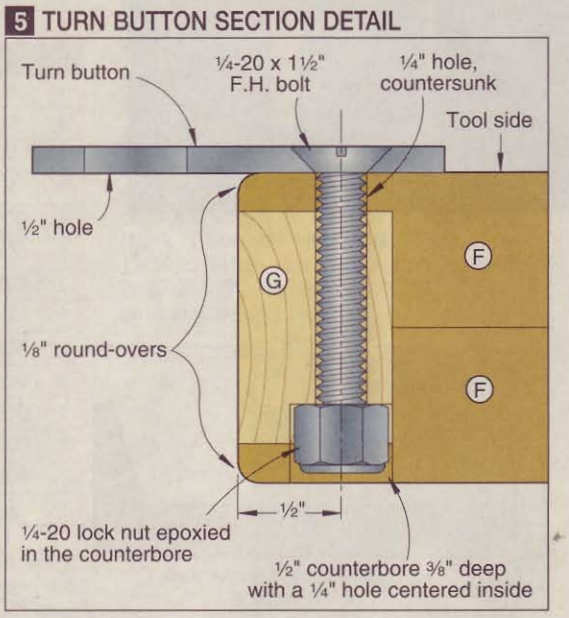

Position your tablesaw fence to center a ½" dado blade in the length of the flip-panel halves, and cut a ¼"-deep groove in each half. Hacksaw a 27" length of ½" steel rod for the flip-panel pivot, and use it to align the mating grooves. Clamp the halves together. The rod should fit without slop, but still turn freely.

3 To cut mating rod grooves in the side rails (D, E), leave the tablesaw fence in the same position used to groove the flip panel. Place the miter gauge in the right-hand slot. Supporting the rails with the miter gauge, and with the ends that are marked with tape against the fence, cut grooves in the parts' mating faces.

4 Glue and clamp parts B, C, D, and E together to form the rail assembly, with the *bottom* of the assembly facing up. To align the side rails (D, E), lay the ½" steel rod in their mating grooves. Check the assembly for square. Drill countersunk screw holes through the lower rails (B, D) and into the upper rails (C, E), where shown on **Drawing 2**. Drive the screws, and remove the rod.

5 Rout ⅛" round-overs on all edges of the rail assembly (B/C/D/E), except for the rear bottom edge of the lower rear rail (B). Sand the assembly to 180 grit.

Build the flip panel

1 Retrieve the flip-panel (F) halves, and rub their grooves with paraffin. Using a foam roller to spread an even coat, apply glue to the grooved face of one flip-panel half. Clamp the panel halves together with their edges flush. Drill pilot and countersunk shank holes, keeping them 1½" from the panel's edges, and drive the screws.

2 Cut 1⅛" grooves ¾" deep, centered in the flip panel's edges, as shown in **Photo A**.

3 Cut the edge inserts (G) to size. Drill ½" holes centered in the inserts' length and width. Now, using the ½" rod to align the inserts, glue and clamp them in the grooves. Remove the rod.

4 To anchor the shop-made turn buttons to the flip panel, drill ½" counterbores ⅜" deep in the panel's corners, and then drill centered ¼" holes in the counterbores, where shown on **Drawing 2**. Epoxy lock nuts in the counterbores. Rout ⅛" round-overs along the ends and edges of the flip panel, and finish-sand it. To make the turn buttons, cut four 2"-long pieces of ⅛×¾" aluminum bar. Drill holes, where shown on **Drawing 3**.

5 Remove the basic cabinet's hardware. Apply three coats of satin polyurethane to the cabinet door, flip panel (F), and the rail assembly (B/C/D/E) and two coats to the cabinet and gusset (A), sanding between coats. To seal the edges of the door, flip panel, and rail assembly, double-coat them as you apply each coat of finish.

Cutting Diagram

¾ x 5½ x 96" Maple (4 bd. ft.)

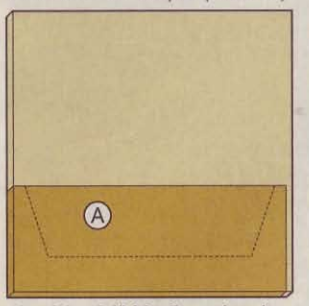

½ x 24 x 24" Medium-density overlay plywood (MDO)

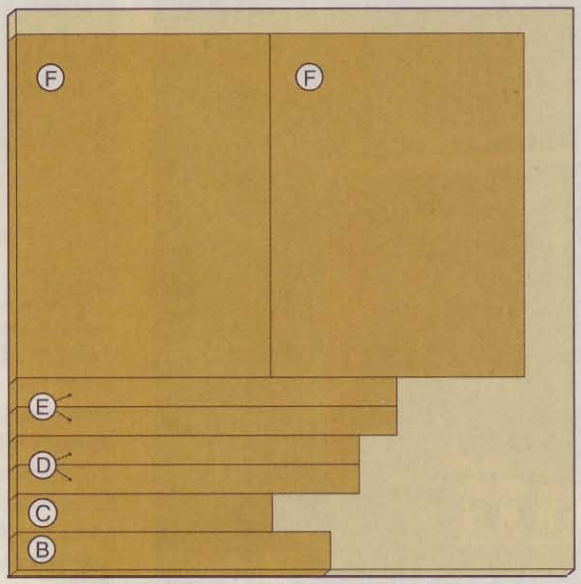

¾ x 48 x 48" Medium-density fiberboard (MDF)

Written by **Jan Svec**
Project design: **Jeff Mertz**
Illustrations: ***Roxanne LeMoine***

Materials List

Part	FINISHED SIZE T	W	L	Matl.	Qty.
A gusset	½"	9"	23½"	MDO	1
B lower rear rail	¾"	3¼"	27"	MDF	1
C upper rear rail	¾"	3¼"	22"	MDF	1
D lower side rails	¾"	2½"	29½"	MDF	2
E upper side rails	¾"	2½"	32¾"	MDF	2
F flip panel	1½"	21 13/16"	29⅜"	LMDF	1
G edge inserts	¾"	1⅛"	29⅜"	M	2
H optional fillers	¾"	2½"	27"	M	3

Materials key: MDO–medium-density overlay plywood, MDF–medium-density fiberboard, LMDF–laminated medium-density fiberboard, M–maple.

Supplies: #8×1", #8×1¼", and #8×1½" flathead wood screws; ½" steel rod 27" long; ½" flat washers (2); ¼-20 lock nuts (4); ¼-20×1½" flathead bolts (4); ⅛×¾" aluminum bar 10" long; quick-set epoxy; flathead bolts, flat washers, and lock nuts for fastening your benchtop tool to the flip panel.

Blades and bits: Stack dado set, ⅛" round-over router bit, ½" Forstner bit.

Assemble the top

1 Attach the flip panel to the rail assembly by pushing the ½" steel rod through the ½×½" channels in the side rails and the panel, inserting ½" flat washers between the panel and the rails.

2 To pin the rod ends to the rail assembly, drill countersunk shank holes through the lower side rails (D) and the rod, and a pilot hole into the upper side rails (E), where shown on **Drawing 4**. Drive the screws.

3 With the rail assembly positioned screw head side down and the flip panel lock nut side down, fasten the turn buttons, as shown on **Drawing 5**. Orient the front pair of turn buttons to bear on the side rails, and the rear pair to bear on the back rail. Tighten the bolts so the turn buttons are snug, but still able to be turned by hand.

Mount the top, and then the tool

1 Clamp the rail/flip panel assembly on the cabinet, flush at the rear with the back edge of the cabinet's upper rear rail, and overhanging the cabinet's upper side rails by ¾".

2 Drill angled countersunk holes through the cabinet's upper side and rear rails and into the top's rail assembly, where shown on **Drawing 2**. Drive the screws.

3 Center your benchtop tool on the flip panel. Mark and drill mounting holes through the panel. To keep the worktop flush when the tool is in its stored position, countersink the holes, and use flathead bolts to fasten the tool to the panel.

4 To stow the tool, steady it with one hand while you turn the front turn buttons so they point straight forward. Now, with both hands on the tool, rotate it to the front. When the flip panel is horizontal again, the turn buttons that were in the front now contact the underside of the lower rear rail (B), and the turn buttons that were in the rear now point straight forward. Rotate these turn buttons to the side so they tuck underneath the lower side rails (D).

Caution: When rotating the flip panel, be sure to keep your fingers away from the pinch zones between the flip panel and the rail assembly.

5 To attach two or more cabinets together, see the sidebar, *right*. For instructions on building a mobile base for this cabinet, see *page 12*.

See more ...
... shop projects at
http://woodstore.woodmall.com/shoptoolac.html

Create a dynamic duo

To join the cabinets together, as shown on *page 55*, cut three optional fillers (H) to the dimensions in the **Materials List**. Glue and clamp two of them together, keeping their ends and edges flush. Then cut pairs of ¾×½" notches in the ends, where shown on **Drawing 2**. Finish the fillers with satin polyurethane.

Clamp the fillers to the first cabinet, where shown on the drawing, *below*. Drill screw holes through the cabinet's side panels into the fillers, angled to the front and rear, as shown. Drive the screws. Clamp the second cabinet in place, drill the screw holes, and drive the screws.

TOP SECTION VIEW

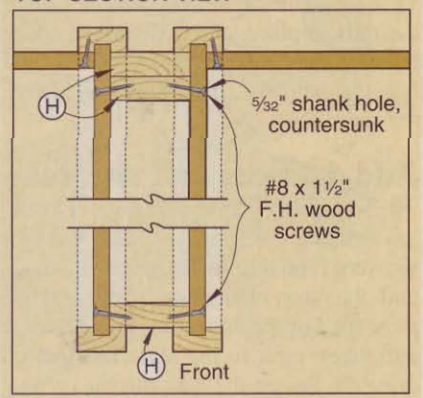

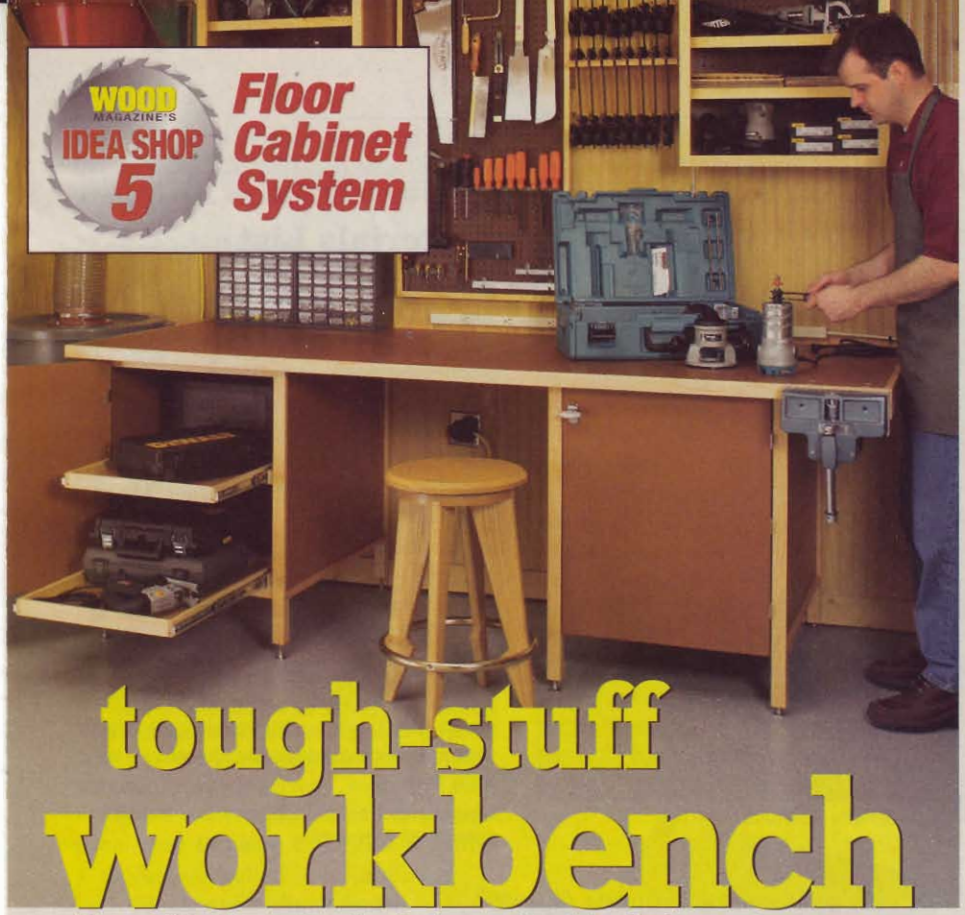

WOOD MAGAZINE'S IDEA SHOP 5

Floor Cabinet System

tough-stuff workbench

Two cabinets and a sturdy top make this design a cinch to build.

This no-nonsense workbench incorporates the essentials: simple base cabinets with deep enclosed drawer and shelf storage and a flat, stable 3×8' top with plenty of room for a beefy woodworking vise.

Build two basic cabinets

1 For the workbench base, start by building two basic floor cabinets *with* legs, using the instructions on *page 48*. Hinge the doors so they open facing each other, as shown on **Drawing 1**.

2 Cut the upper front rails (A) to the size shown on the **Materials List**. With a dado blade in your tablesaw, cut ½×¾" notches in the rails' ends. Clamp the rails in place, and drill angled countersunk screw holes through the rails and into the cabinets' upper side rails. Drive the screws.

Add drawers and shelves

1 To add drawers to one cabinet, make two pairs of drawer cleats and two drawers referring to the three drawings and the accompanying instructions on *page 63*. For the drawer cleat and drawer part sizes, refer to the **Materials List** on *page 68*. Fasten the cleats to the cabinet where shown on **Drawing 1**, *opposite*.

2 Install the drawer slides' drawer and cabinet members, where shown. Drill pilot holes, and drive the screws.

3 Position shelf standards in the other cabinet, where shown on **Drawing 2**. Drill pilot holes, and fasten them with #5×⅝" flathead wood screws.

4 Cut the shelf (B) and shelf edges (C) to the sizes listed. Cut slots for #20 biscuits, where shown on **Drawing 1**. Glue, biscuit, and clamp the edges to the shelf. Sand the edges flush with the shelf's top surface, and rout ⅛" roundovers on the front edges, where shown.

Make the benchtop

1 Cut two 34½×94½" pieces of ¾" MDF for the top (D). Spread glue using a foam or short-nap roller, and clamp the two pieces together, keeping their ends and edges flush. Drill screw holes, and drive the screws.

2 Cut the end bands (E) to size, and glue and clamp them to the top (D). For help with this operation, see the **Shop Tip**, *below*. Then cut the side bands (F) to size. Working on one side at a time, glue and clamp each band in place.

3 Rout ⅛" round-overs along all the top's ends and edges, and sand it to 180 grit. For an easily renewed finish, apply two coats of penetrating oil finish, letting each one dry without wiping it down. Lightly sand the second coat with 220-grit sandpaper, and then apply a third coat. Let this coat dry for five minutes, and then wipe it with a soft cloth.

4 Remove all the hardware except the T-nuts. Apply three coats of satin polyurethane to the shelf and doors, and two coats to all the other parts, sanding between coats with 180-grit sandpaper. To seal the doors' edges, double-coat them as you apply each coat of finish.

Now put it all together

1 Position the cabinets 30" apart. When placing the workbench against a wall, push the cabinets as close to it as possible. Level them individually and in relation to each other. Lay the benchtop on the cabinets, leaving (for a right-hander) 3" overhanging the left-hand one. This leaves 12" overhanging the right-hand cabinet for mounting a vise. If used against a wall, push the top tight against it. Placed away from the wall, center the top front-to-back on the cabinets.

SHOP TIP

Making do with short clamps

To glue the end bands (E) to the top (D), you might think you'll need either 8'-long bar clamps or special edge-gluing clamps. But here's an easy method that uses the bar clamps you already have.

Screw a cleat to the bottom face of the top (D) within reach of your longest clamps. Apply glue, and use short clamps and moderate pressure to hold the end band (E) in place, flush with the top's ends and top and bottom surfaces. Hook your long clamps on the cleat, as shown, *right*, and apply pressure to the band.

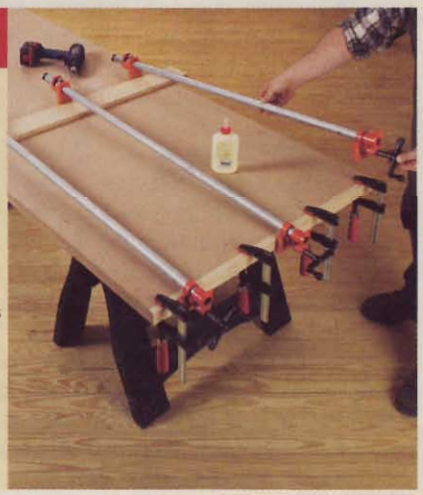

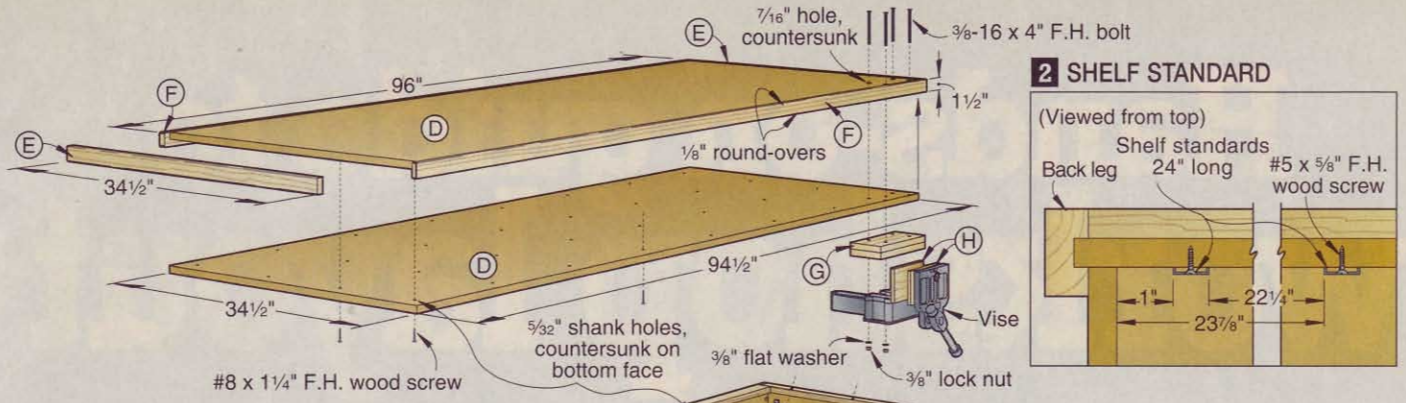

2 SHELF STANDARD

1 EXPLODED VIEW

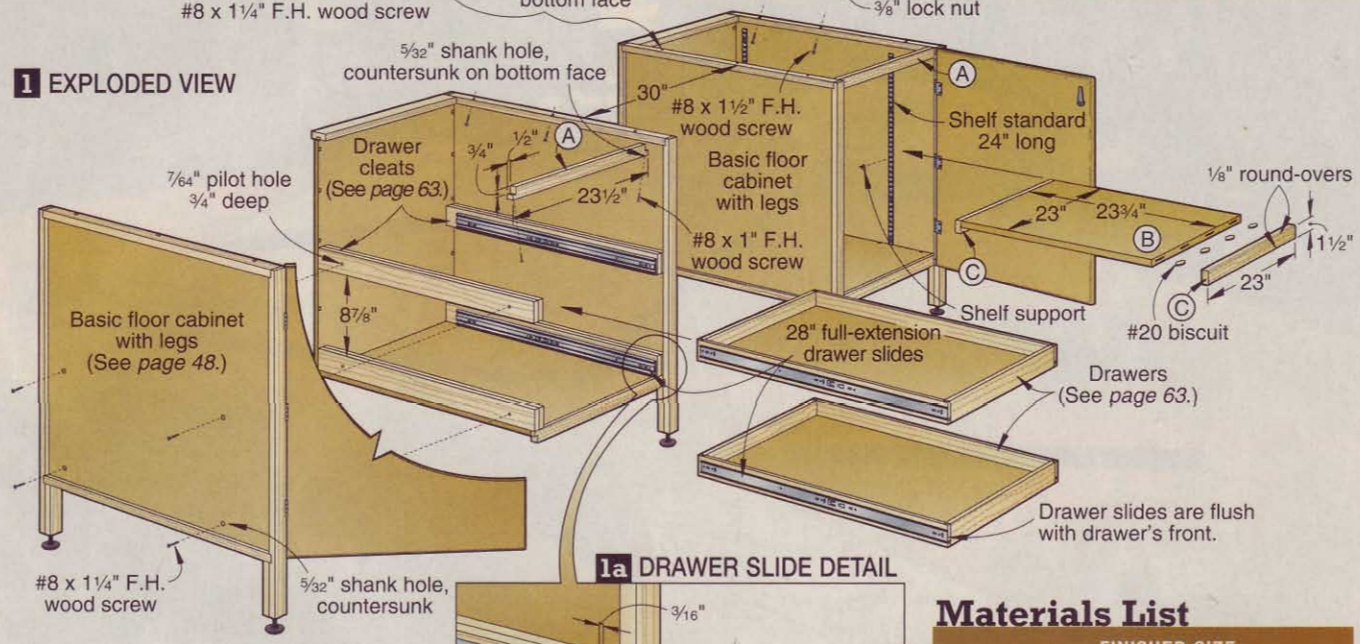

1a DRAWER SLIDE DETAIL

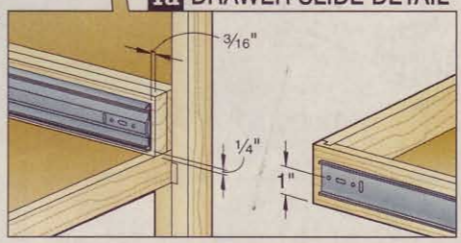

2 Clamp the top to the cabinets, and drill angled countersunk screw holes through the cabinets' upper side rails and into the benchtop, where shown on **Drawing 1**. Drive the screws.

3 Reinstall all the hardware and the drawers. Clip in the shelf supports, and install the shelf.

4 Referring to the instructions that come with it, install your vise. The Wilton vise shown requires a 3" benchtop thickness where it is mounted. To install it, laminate a 1½×4¼×10¼" spacer (G) from ¾"-thick stock. Clamp it to the underside of the benchtop flush with its end and front edge. Drill and countersink holes for ⅜" flathead bolts, and bolt the vise and spacer in place. To fit the Wilton vise with wood jaw faces that are flush with the benchtop, cut the optional jaw faces (H) to size. Secure them to the vise jaws with #12×¾" flathead wood screws and ¼-20×1" flathead bolts.

Written by **Jan Svec**
Project design: **Jeff Mertz**
Illustrations: **Roxanne LeMoine**

Cutting Diagram

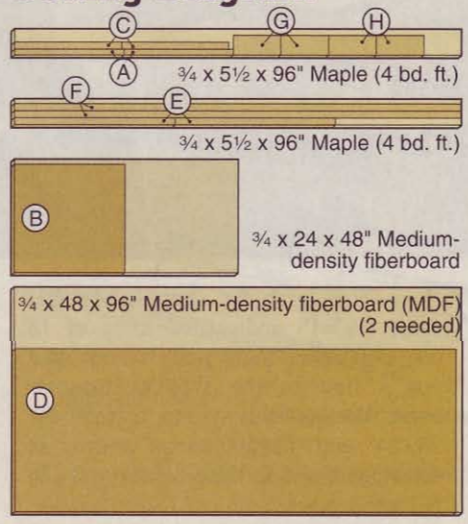

For plans to make the Workshop Stool shown in the photo, *opposite page, top*, go to:
http://woodstore.woodmall.com/shoptoolac.html

Materials List

Part	FINISHED SIZE T	W	L	Matl.	Qty.
A upper front rails	¾"	1¼"	23½"	M	2
B shelf	¾"	23"	23¾"	MDF	1
C shelf edges	¾"	1½"	23"	M	2
D top	1½"	34½"	94½"	LMDF	1
E end bands	¾"	1½"	34½"	M	2
F side bands	¾"	1½"	96"	M	2
G optional spacer	1½"	4¼"	10¼"	LM	1
H optional jaw faces	¾"	4¼"	10¼"	M	2

Materials key: M–maple, MDF–medium-density fiberboard, LMDF–laminated medium-density fiberboard, LM–laminated maple.

Supplies: #8×1", #8×1¼", #8×1½", and #5×⅝" flathead wood screws; 24"-long shelf standards (4); shelf supports (4); #20 biscuits. To mount the Wilton vise: ⅜-16×4" flathead bolts, ⅜" flat washers, and ⅜" lock nuts (4 of each); #12×¾" flathead wood screws (2); ¼-20×1" flathead bolts (2).

Blades and bits: Stack dado set, ⅛" round-over router bit.

Buying Guide

Cabinets. Order hardware for two cabinets with feet as listed in the Buying Guide on *page 51*, plus 28" full-extension drawer slides no. 02K10.28, $17.20/pair (2 pairs). Lee Valley Tools Ltd. Call 800/871-8158 or go to www.leevalley.com.

Vise. Wilton 79A woodworking vise no. 126504, $129.99. Visit your local Woodcraft store, call 800/225-1153, or shop online at www.woodcraft.com.

Hands-on guide to workshop layout

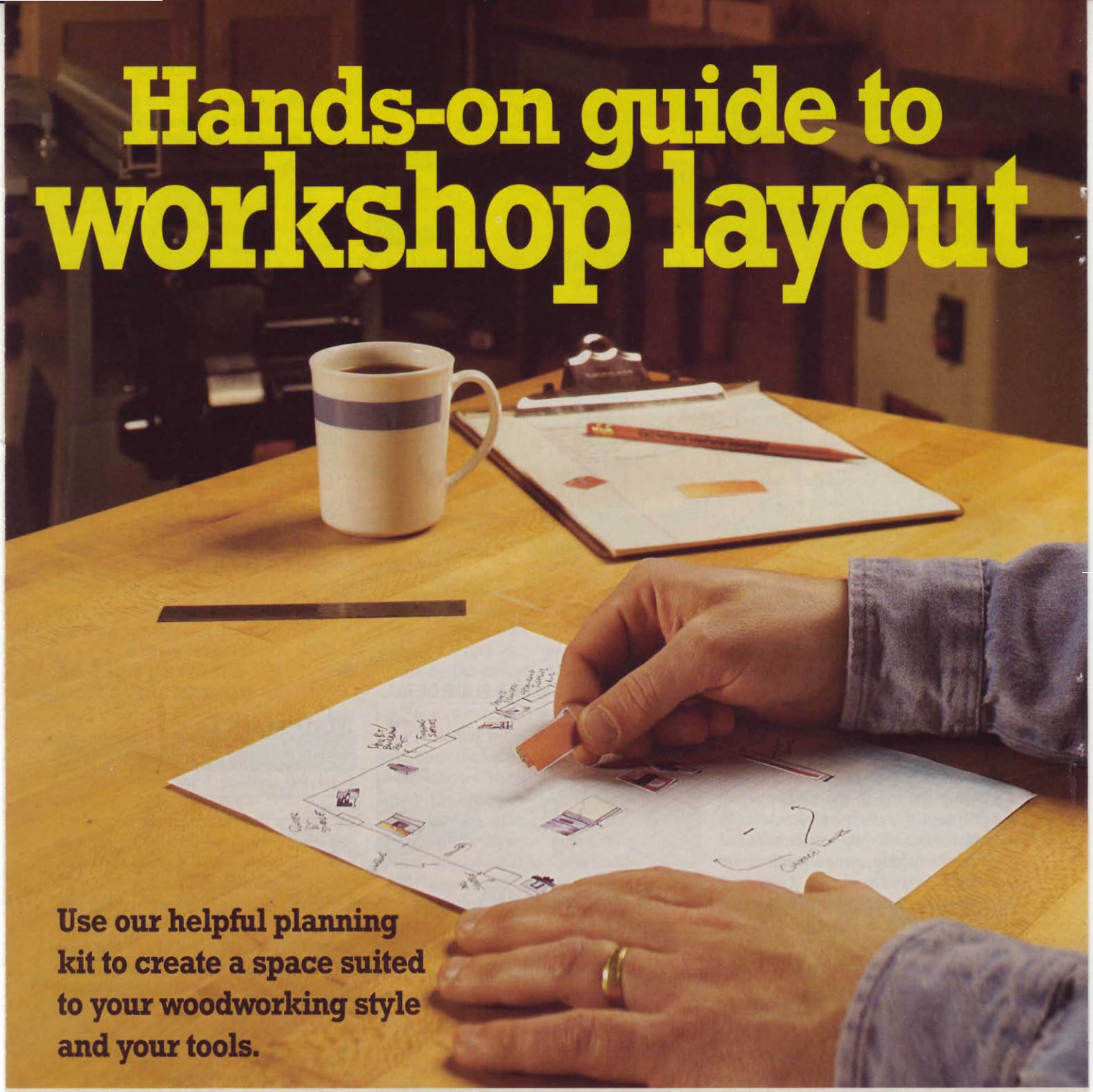

Use our helpful planning kit to create a space suited to your woodworking style and your tools.

You can describe a workshop in many ways, but definitely not with "one size fits all." Even if we own similar tools, each of our needs, methods of working, and available space may be completely different.

Regardless of your special situation, we'll show you how to lay out a good workshop without ever moving around your heavy tools. To begin, gather up a pencil, paper, and an inventory of what tools you own or want to own for your shop. Then grab the super-handy grid sheet (¼"=1') and scaled icons of 18 common shop tools and fixtures that you'll find in the *WOOD Patterns*® insert. We used this system to create the 24×24' and 12×20' shops shown in **Drawings 1** and **2**. Here is how you can put it to work.

Pick a place

If you're setting up a new shop, as opposed to redoing an existing one, figure out where it should be located. Basements hold great appeal because they have electrical service, heat, and at least some lighting. On the downside, challenges exist getting big machines in and projects out. Plus, noise and mess can invade the house. A stand-alone building solves those problems, but requires space and a sizable investment.

A garage represents a reasonable compromise. To turn one into a shop, you'll have to beef up the electrical service and

1 Organize to maximize your shop's potential

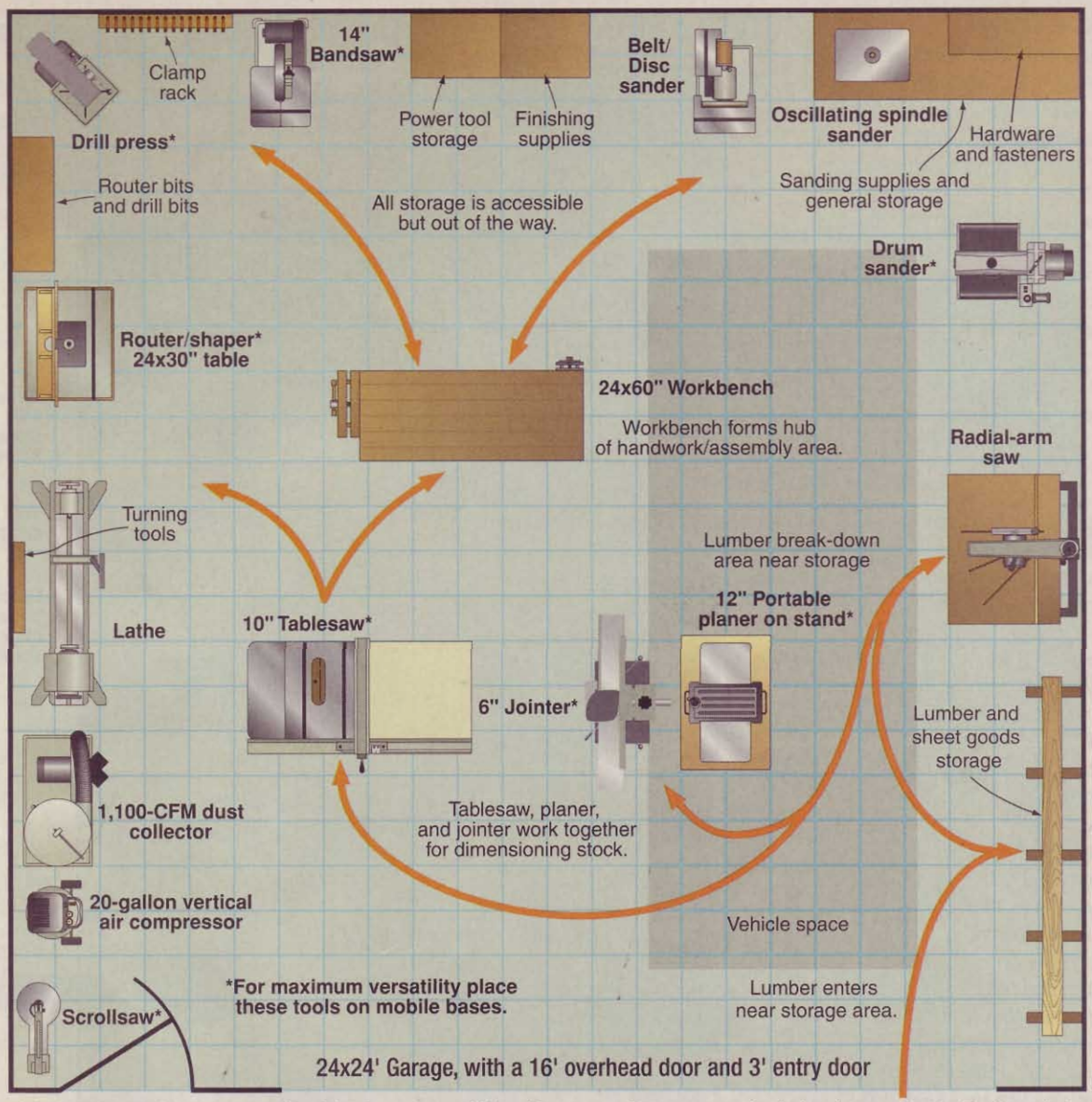

Careful planning makes every tool in this shop accessible without creating a space that's hard to navigate. Enclosed storage areas keep the items within secure and away from dust, and they're conveniently located near the work centers they serve.

lighting, and you may need to add heat. But a garage offers many advantages of a dedicated building and, believe it or not, can still accommodate cars on occasion.

Once you decide where your shop belongs, plot the overall dimensions of the space onto the grid, as we did, including doors.

Prioritize your tools

Now take time to think about the projects you build. Many woodworkers set up with a standard "furnituremaker's" layout—tablesaw and workbench in the middle surrounded by other tools—as we did in **Drawing 1**. But if you spend your time creating boxes at the router table, or turning bowls on the lathe, consider making that your centerpiece tool. You decide which deserves prime space.

Surround that most-used tool with its supporting players. The less important its role, the farther a tool can sit from the hub. At this point, just get the tools on the page, not worrying about their exact final location.

In a smaller shop, you may discover that you lack enough space for all the tools to be set up at one time. Don't fret, we'll bring you solutions shortly. For now, find homes for the largest and most important tools.

Stock up on storage

With your rough positioning completed, turn your attention to storage. Make a list of all the items you need to keep put away. In addition to such obvious items as power tools and lumber, don't forget fasteners and hardware, clamps, and finishing supplies. These little items can eat up big space. Now figure out which should be stored together. For example, drill bits and router bits, plus drilling and routing accessories, go well together.

Paying attention to storage needs also helps you refine tool layout. In the shop in **Drawing 1**, the drill press and router table are closely located, with a single cabinet in between that serves both.

Note: The drill press resides in a corner for a reason. It takes only about 2' of space, but can handle a 4'-long board.

Go with the flow

Before moving tools into final position on your drawing, think about workflow in the shop, as shown by the orange arrows in **Drawing 1**. You don't want to move lumber or project parts around any more than necessary as you work.

In both layouts shown here, raw lumber and supplies enter conveniently through the garage door opening. As machining breaks the lumber into parts, they move toward the back of the shop. Think of three "zones" in the shop. In the first, you store and break down raw stock. Then, you dimension that stock to create project parts. Finally, you machine and assemble the parts, plus sand and finish the project. Work centers, such as the sanding area at the upper right of **Drawing 1**, exist within each zone. These concentrate similar activities within a smaller area.

So, using your list of tools and storage needs, begin arranging your drawing to best accommodate workflow. You'll have to make a few compromises, especially if your shop is long and narrow or oddly shaped. As stated earlier, in the small shop, concentrate on positioning your main machines. Place secondary ones off to the side.

Draw in storage racks and cabinets based on what tools they serve, what they hold, and where they'll fit. Rather than include icons for cabinets, we'll let you sketch your own to create custom sizes best suited to your layout.

Don't forget, too, that long boards, and especially sheet goods, require lots of infeed and outfeed space. That's why we've even included templates for a sheet of plywood and an 8' board that you can use to test the position of your tablesaw.

In a small shop, as in **Drawing 2**, creating zones can prove challenging. Concentrate most on establishing effective workflow patterns; locating ample storage space; and locating tools, such as a workbench, that are difficult to move. Then put the rest on wheels.

Get mobile, be flexible

Any shop, from small to large, benefits from mobility. Why? Shops constantly evolve as you add tools or take on new woodworking challenges. Or, you may simply need extra assembly space for a large project. And face it: In a garage shop, you might have to accommodate cars. Flexibility, then, is critical.

The mobile shop—fitting it all in a little space

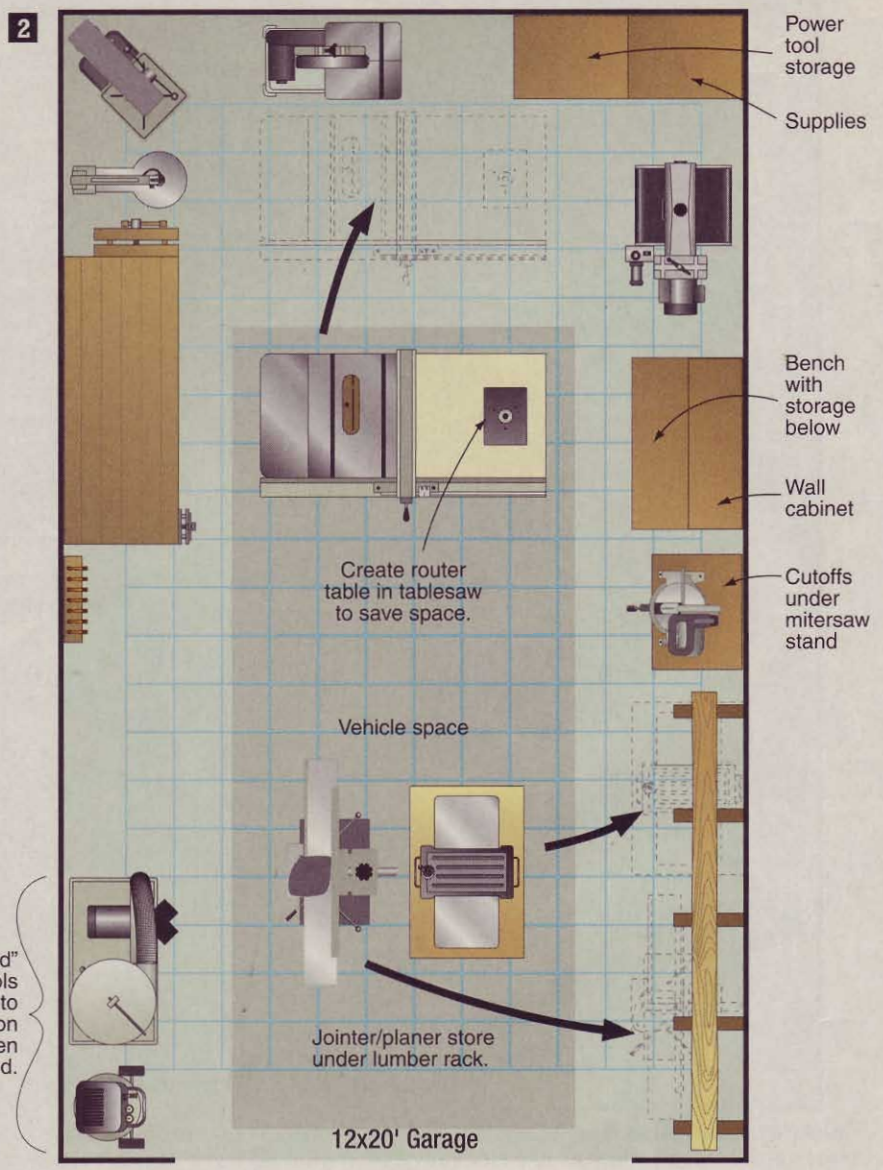

You can fit a complete shop into a one-car garage—and still have room for the car—if you carefully plan where each tool resides during use, and while in storage.

In **Drawing 1**, all of the tools marked with an asterisk would ideally rest on mobile bases. In this shop, the tablesaw, planer, and jointer would get bases first so they can be moved to allow parking cars. With bases, such tools as the drum sander, router table, bandsaw, and drill press could roll into open areas when they need to accommodate large stock.

In the shop in **Drawing 2**, mobile bases are just about mandatory. Placing tools on wheels allows them to be "parked" out of the way when not needed. Plus, getting a car in here requires pushing everything out of the way.

There you go. Without straining your back hefting heavy tools, you've laid out your shop. But saving labor is just one advantage of this simple system. You may want to try several different setups, and you can use the system again should you reconfigure the space at a later time. Plus, you can easily draw in the basic layouts of your dust-collection, electrical, and lighting systems. Just adhere your templates after finalizing your layout, make photocopies, and draw on them.

Written by **David Stone**

mobile sawing/routing center

For enhanced dust collection add a router fence with integral dust port.
Connect dust hose to ports on back of cabinets.
27x51" top provides ample workspace for handling large stock and sheet materials.
Tablesaw cabinet (same construction as basic cabinet, page 48)
Router cabinet (made from basic cabinet, page 48)
Keep blades, tools, and accessories at the ready in these convenient storage areas.
Mobile base (page 12)

Baffles in cabinets direct contained sawdust to dust-collection ports.
Deep router-cabinet drawer keeps bits, tools, and accessories organized and handy.
Size the cabinets' dust-collection holes to suit your system.

WOOD MAGAZINE'S IDEA SHOP 5

Floor Cabinet System

Increase the capacity of your tablesaw and router by combining them in one accommodating twin-cabinet design. The advantages include a larger tabletop, ample onboard accessory storage, and dedicated dust containment.

This compact wheeled work center provides all kinds of room for router bits, saw blades, miter gauges, wrenches, and other accessories. To ease construction, the plan calls for the Idea Shop 5 mobile base and the basic cabinet design for the router cabinet, both explained elsewhere in this issue. The tablesaw cabinet mirrors the basic cabinet construction but has different dimensions. Add drawers, tops, and dust-containment parts to the cabinets, where shown, and you're ready to roll, literally.

1a BAFFLE SECTION DETAIL

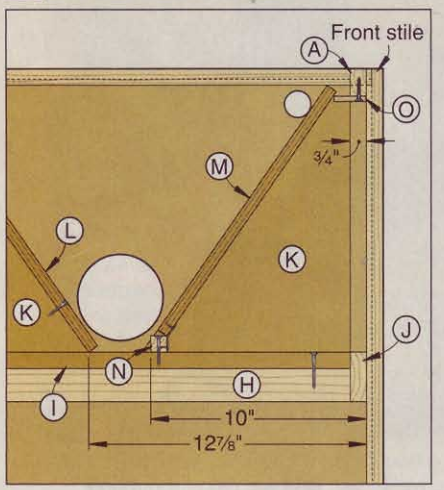

1 ROUTER TABLE CABINET

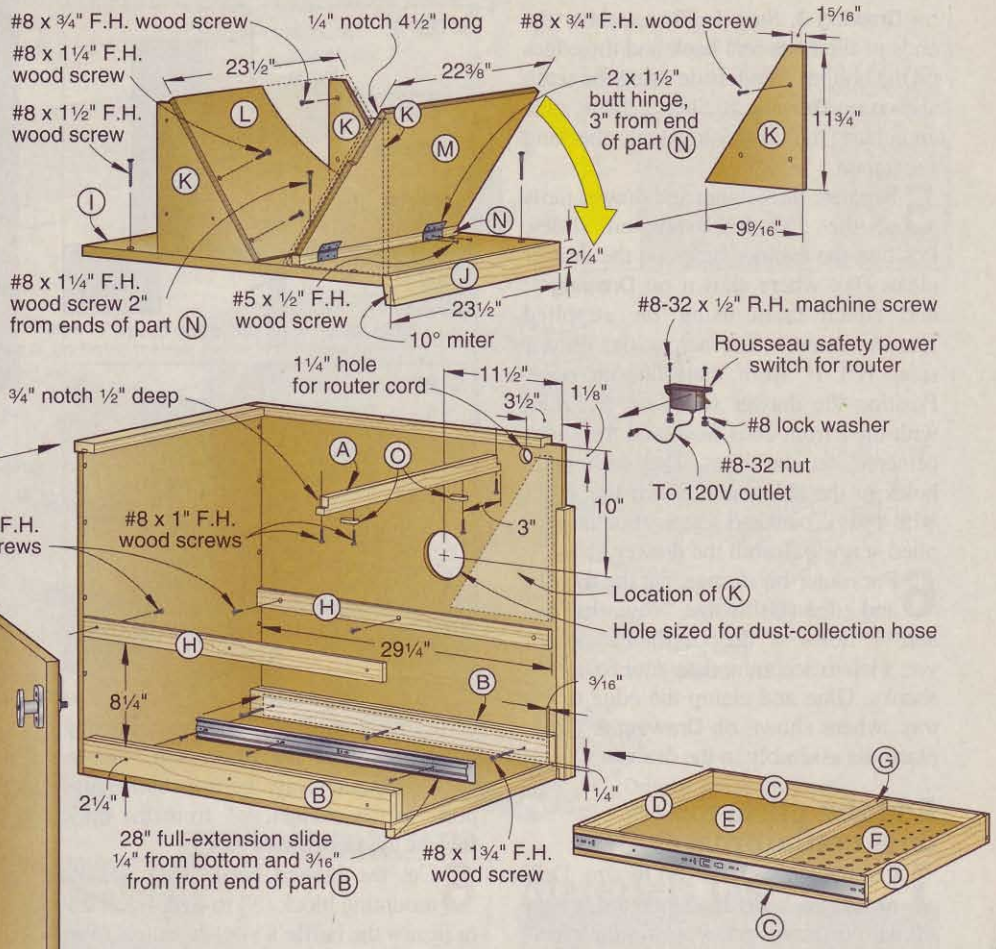
#8 x 3/4" F.H. wood screw
1/4" notch 4 1/2" long
#8 x 3/4" F.H. wood screw
1 5/16"
#8 x 1 1/4" F.H. wood screw
23 1/2"
22 3/8"
2 x 1 1/2" butt hinge, 3" from end of part N
#8 x 1 1/2" F.H. wood screw
11 3/4"
9 9/16"
2 1/4"
#8 x 1 1/4" F.H. wood screw 2" from ends of part N
#5 x 1/2" F.H. wood screw
23 1/2"
10° miter
#8-32 x 1/2" R.H. machine screw
Rousseau safety power switch for router
1 1/4" hole for router cord
11 1/2"
3 1/2"
1 1/8"
3/4" notch 1/2" deep
#8 lock washer
#8-32 nut
To 120V outlet
10"
#8 x 3/4" F.H. wood screws
#8 x 1" F.H. wood screws
3"
Location of K
Hole sized for dust-collection hose
29 1/4"
3/16"
8 1/4"
2 1/4"
1/4"
28" full-extension slide 1/4" from bottom and 3/16" from front end of part B
#8 x 1 3/4" F.H. wood screw
Basic cabinet without legs and with door hinged on left side

Note: For #8 flathead wood screws, drill countersunk 5/32" shank holes and 7/64" pilot holes. For #5 flathead wood screws, drill 1/16" pilot holes.

2a DRAWER LOCK-JOINT DETAIL (TOP VIEW)

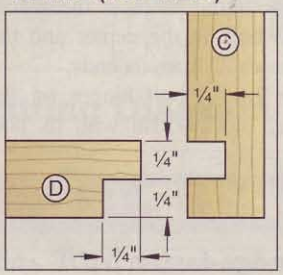

2 ROUTER CABINET DRAWER

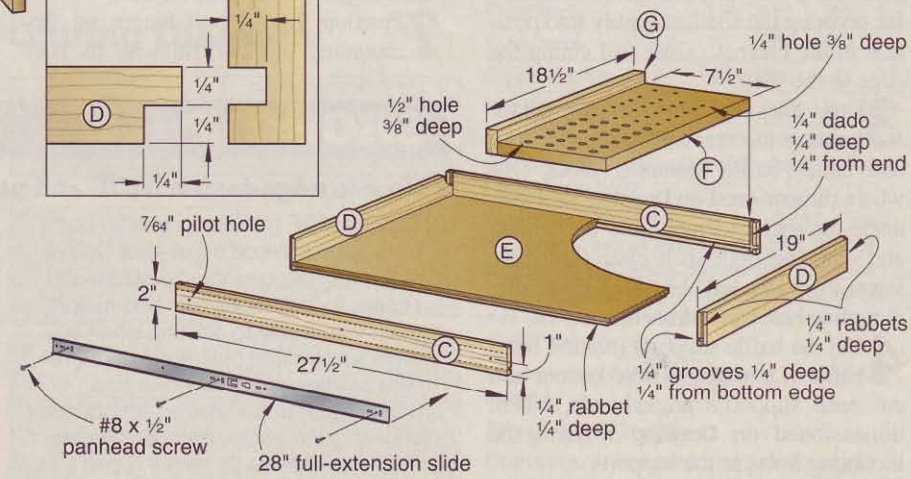

For the board feet of lumber and other items needed to build this project, see *page 68*.

Start with the router cabinet

1 Build a basic cabinet *without* legs, and hinge the door on the cabinet's left side, as directed in the article on *page 48*. Before you assemble the cabinet, drill a hole sized to accommodate your dust-collection hose and a 1¼" hole for your router's electrical cord in the right side panel, where dimensioned on **Drawing 1**, *above right*.

2 Cut the upper front rail (A) to the size listed in this article's **Materials List**. Notch the rail's ends, where shown. Clamp the rail in the cabinet behind its front stiles, drill the mounting holes, and drive the screws into the upper side rails.

3 From ¾"-thick stock, cut four 2¼×30" pieces to form the drawer cleats (B). Laminate the pieces to make a pair of 1½"-thick cleats. Drill mounting holes in the cleats. Then, glue and screw the cleats to the cabinet's side panels, where shown.

4 To make the cabinet's drawer, cut the sides (C), front and back (D), and bottom (E) to size. Next, form the dadoes in the sides (C), and the grooves in the sides, front, and back, where shown on **Drawings 2** and **2a**, using the setup shown

on **Drawing 3**, Step 1. Then, rabbet the ends of the front and back and the edges on the bottom's underside using the setup shown on **Drawing 3**, Step 2. Now, glue and clamp the drawer together, checking for square.

5 Separate the cabinet and drawer parts of the 28" full-extension slides. Position the cabinet slides on the drawer cleats (B), where shown on **Drawing 1**, and attach them using the supplied screws. Draw a line across the drawer sides (C) 1" from their bottom edge. Position the drawer slides on the sides with their front ends flush and the slides centered on the lines. Drill mounting holes in the sides, and attach the slides with #8×½" panhead screws (not the supplied screws). Install the drawer.

6 For router-bit storage, cut the tray (F) and edge (G) to size. Now, drill ½" and ¼" holes ⅜" deep in the tray where you wish to accommodate your router-bit shanks. Glue and clamp the edge to the tray, where shown on **Drawing 2**. Then, place the assembly in the drawer.

Add the parts for dust containment

1 Cut the shelf cleats (H) to size. Drill mounting holes in the cleats, where shown on **Drawing 1**. Position the cleats in the cabinet tight against the back panel, and drive the screws.

2 Cut the shelf (I) and shelf edge (J) to size. Miter-cut the shelf edge's left end where shown. (This gives clearance for pivoting the shelf assembly into position in the cabinet.) Glue and clamp the edge to the shelf.

3 Draw lines across the shelf's width for locating the rear baffle supports (K) and hinged-baffle mounting block (N), where dimensioned on **Drawing 1a**. Now, angle the shelf assembly into the cabinet and onto the right shelf cleat (H); then, lower it onto the left cleat. Drill the shelf's mounting holes, and drive the screws.

4 Cut the baffle supports (K) and fixed baffle (L) to size. Then, lay out and cut each support's angled side, where dimensioned on **Drawing 1**. Drill the mounting holes in the supports.

5 Glue and screw the rear baffle supports to the cabinet's side panels, aligning the bottom of the supports' angled sides with the marked line on the shelf (I) closest to the cabinet's back. Then, position the fixed baffle on the supports, drill the mounting holes, and drive the screws. For proper fastening technique, see the **Shop Tip**, *below*. Now, glue and screw the front baffle supports to the cabinet, ¾" from the back face of the front stiles.

3 MACHINING THE DRAWER PARTS (ENDS AND BOTTOM EDGES)

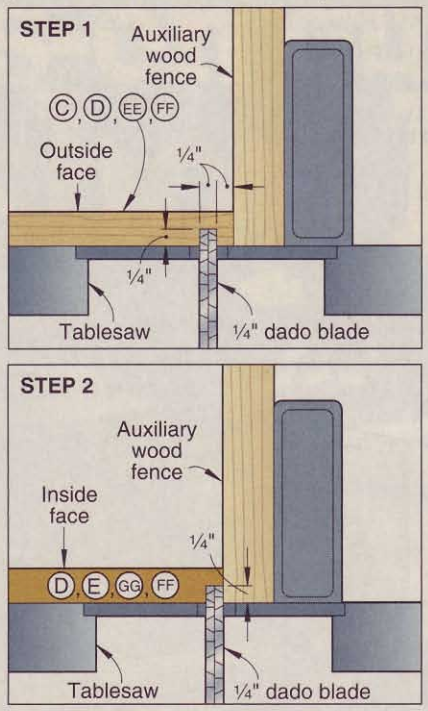

6 Cut the hinged baffle (M) and its mounting block (N) to size. Bandsaw or jigsaw the baffle's ¼×4½" notch. (The notch allows the baffle, when lowered, to clear the cabinet's door hinges.) Then, drill three mounting holes in the block, locating one hole in the center and the remaining holes 2" from its ends.

7 Position 2×1½" butt hinges on the mounting block, flush with its bottom, where shown. Drill mounting holes, and drive the screws. Next, position the mounting block against the baffle's bottom edge, and center it end to end. Attach the hinges to the baffle, as shown in **Photo A**.

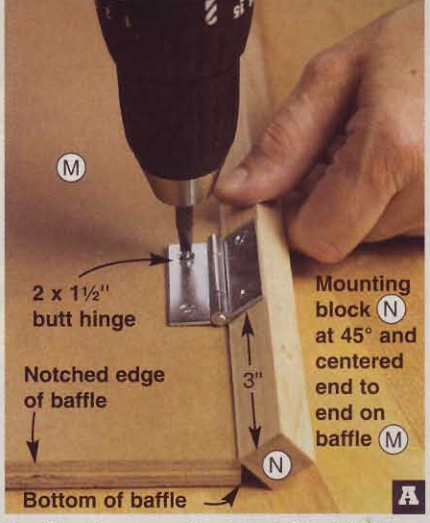

Position the mounting block (N) at 45° to the baffle (M). Drill the hinge mounting holes, and screw each hinge to the baffle.

8 Place the baffle/mounting block assembly (M/N) in the cabinet, aligning the block with the marked line on the shelf (I) closest to the cabinet's front. Drive the center screw through the block into the shelf. Now, raise and lower the baffle, and make sure it clears the supports (K). If necessary, adjust the clearance by pivoting the mounting block on the center screw. Then, drive the outer screws to secure the block, as shown in **Photo B**.

9 Make two copies of the turn button pattern on the *WOOD Patterns®* insert. Spray-adhere the patterns to ¼"-thick stock. Bandsaw or jigsaw the turn buttons (O) to shape, and sand smooth.

SHOP TIP

How to edge-fasten MDF and plywood without splitting

Though MDF (medium-density fiberboard) and plywood make ideal cabinet materials because they're stable and strong, their composition also makes them vulnerable to splitting when you drive screws into their edges. To prevent splitting, drill pilot holes to a depth equal to the screws' length, as shown in the photo, *right*, and locate the holes at least 2" from the part's ends, as shown in the photo, *far right*. Also, when drilling shank holes in these materials, countersink the holes on the back side to ensure flush-fitting parts. The countersinks give room to receive material pulled out when driving the screws.

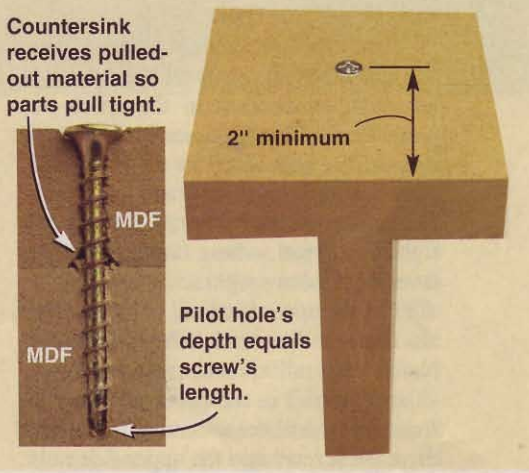

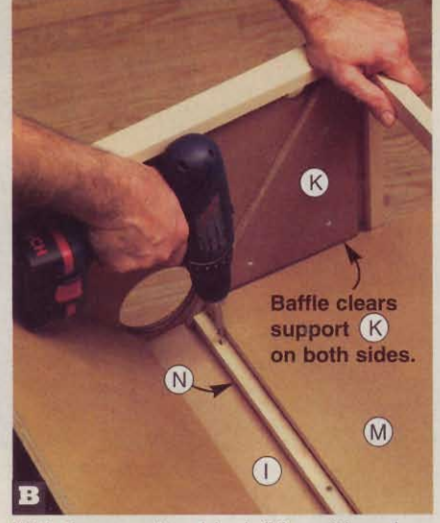

With the mounting block (N) positioned so the baffle (M) clears the supports (K), drive the remaining screws in the block.

4 ROUTER CABINET TOP

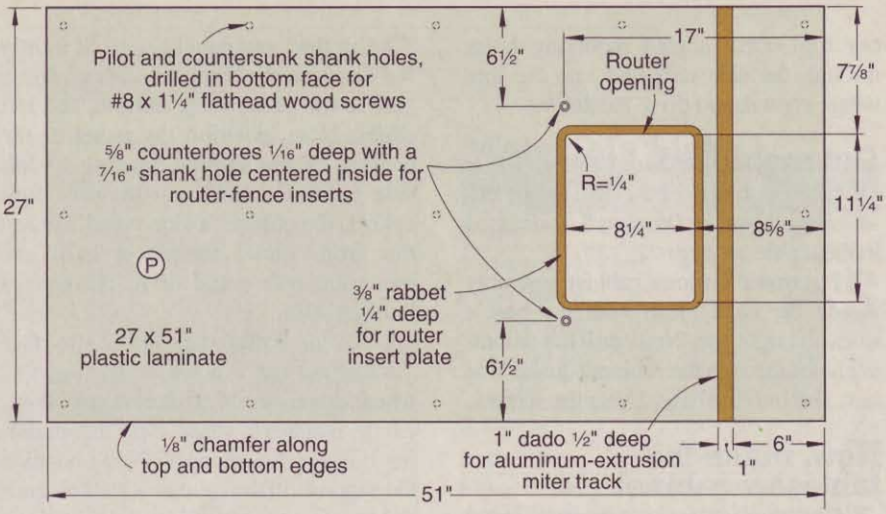

Then, drill the mounting holes, and screw the buttons to the top front rail's bottom edge, where dimensioned on **Drawing 1**. Now, raise the hinged baffle (M), and position the turn buttons so they hold up the baffle, where shown on **Drawing 1a**.

Head for the top

Note: *The width of the top (P) must match the front-to-back length of your tablesaw's top. The top of our Delta contractor's saw measures 27", which is a fairly common size for saws of this type. Measure your tablesaw's top, and cut the width of the top to your measurement.*

1 To form the 1½"-thick laminated top (P), first cut one ¾"-thick piece to size. Then, cut another piece, and a piece of plastic laminate, ½" longer in width and length. (We used Formica laminate no. 902-58, platinum color, matte finish.)

2 Glue, screw, and clamp the top pieces together, centering the piece cut to size on the oversize piece. Make sure the screws do not line up with the router insert plate opening or the dado for the aluminum-extrusion miter track, where shown on **Drawing 4**.

3 Adhere the plastic laminate to the oversize top piece with contact cement. Later, using your router and a flush-trimming bit, trim the oversize top/laminate to the finished size. Then, chamfer the top's edges.

4 Cut a 1" dado ½" deep in the top, where dimensioned, for the miter track. Then, from a 4' length of track, cut a 27"-long piece to fit the dado. Abrade the bottom and sides of the track with 40-grit sandpaper, and remove the dust. Now, apply five-minute epoxy to the dado's bottom and sides, and clamp the track in the dado.

5 The router table is shown in the opening photo with a Freud fence. To install this fence, drill counterbored holes, where dimensioned on **Drawing 4**, to receive the threaded inserts supplied with the fence. (For a list of all of the tools and accessories that we used for this project, see *page 8*.)

6 To install the ¼×9×12" Rousseau router insert plate shown on **Drawing 5**, machine the opening and rabbeted recess in the top (P), where dimensioned on **Drawing 4**. See the article on *page 70* for instructions on how to do this.

7 Position the top on the router cabinet, where shown on **Drawing 5**, so it overhangs the cabinet's side rails and door-end stiles an equal amount (¾" for

5 ROUTER/TABLESAW CABINET

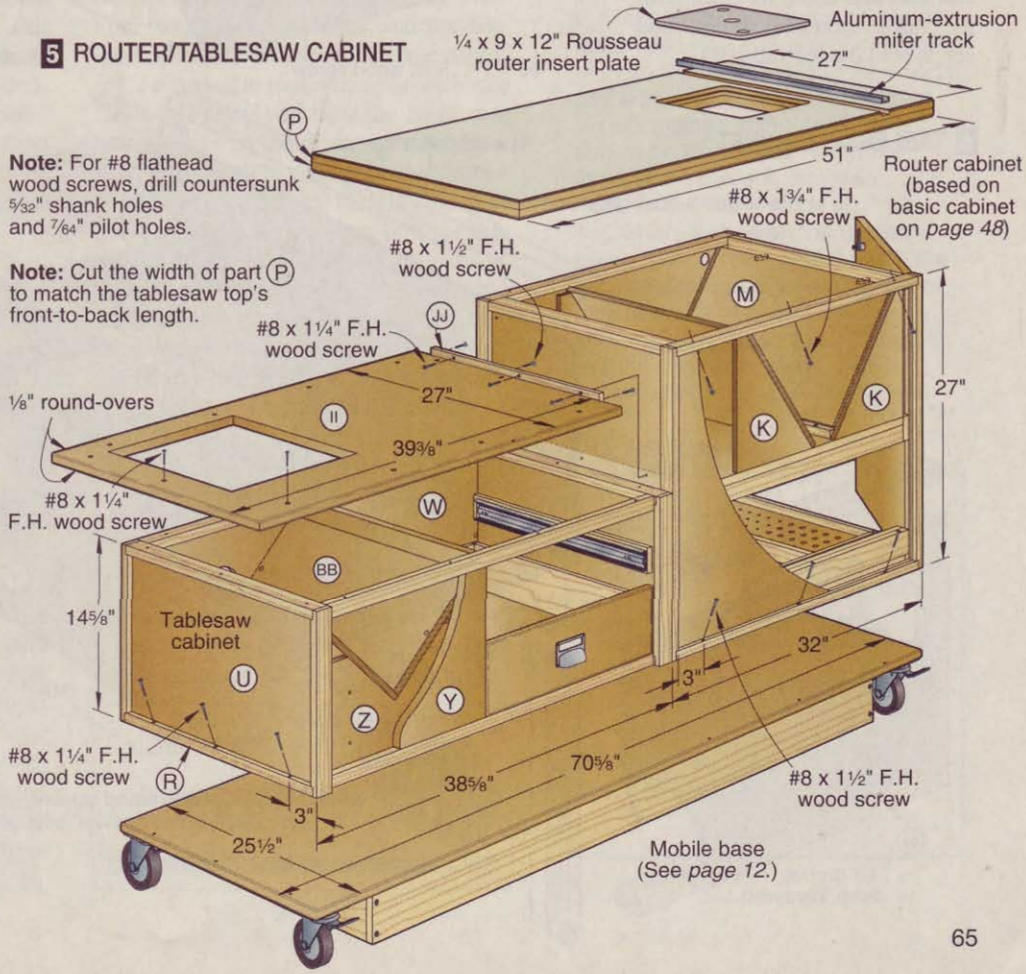

our top). Drill angled mounting holes through the side rails and into the top, where shown, and drive the screws.

Get mobilized

1 Build a mobile base to the dimensions shown on **Drawing 5**, as directed in the article on *page 12*.

2 Position the router cabinet assembly on the base, flush with the base's sides and right end. Now, drill the mounting holes through the cabinet's lower side rails and into the base. Drive the screws.

Now, make the tablesaw cabinet

1 Cut the tablesaw cabinet's stiles (Q), rails (R), lower front rail (S), back rail (T), side panels (U), bottom panel (V), and back panel (W) to the sizes listed. Using the same process as you did to build the router cabinet, machine the grooves, rabbets, and notches in the rails, stiles, and back panel. See **Drawing 6**. Drill a hole for your dust-collection hose in the back panel, where dimensioned. Now, assemble the cabinet.

2 Cut the upper front rail (X) to size, and notch its ends. Drill the rail's mounting holes, and screw it to the top rails (R).

3 Cut the front panel (Y) to fit tightly between the front rails. Next, apply glue to the panel's top, bottom, and left edges. Now, position the panel in the cabinet, where shown, locating its left side behind the front stile and tight against the cabinet's side panel. Clamp the front panel in place, drill the mounting holes, and drive the screws into the stile.

4 Cut the baffle supports (Z) to size. Lay out the V-notch in the supports, where dimensioned on **Drawing 6**. Then, cut the notches to shape. Drill the mounting holes in the supports. Now, position the supports in the cabinet with their ends tight against the left side panel, and drive the screws.

5 Cut the left and right baffles (AA, BB) to size. Glue and screw the left baffle to the supports (Z). Then, apply glue to the right baffle's bottom edge and to the support's top (notch) edges, and install the baffle, as shown in **Photo C**.

Position the right baffle (BB) on the supports (Z). Clamp it to the left baffle (AA), and screw it to the supports.

6 Cut the divider (CC) to size. Notch one corner, where shown on **Drawing 6**. Now, glue, clamp, and screw the divider in the cabinet.

Time for more drawers

1 Cut the drawer cleats (DD) to size. Drill the mounting holes; then, glue and screw the cleats to the cabinet, where shown on **Drawing 6**, with their ends tight against the back panel.

2 Cut the drawer sides (EE), fronts and backs (FF), and bottoms (GG) to size. Drill mounting holes in the drawer fronts for attaching the false fronts (HH),

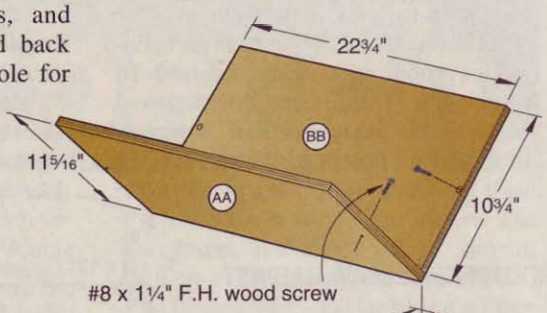

6 TABLESAW CABINET

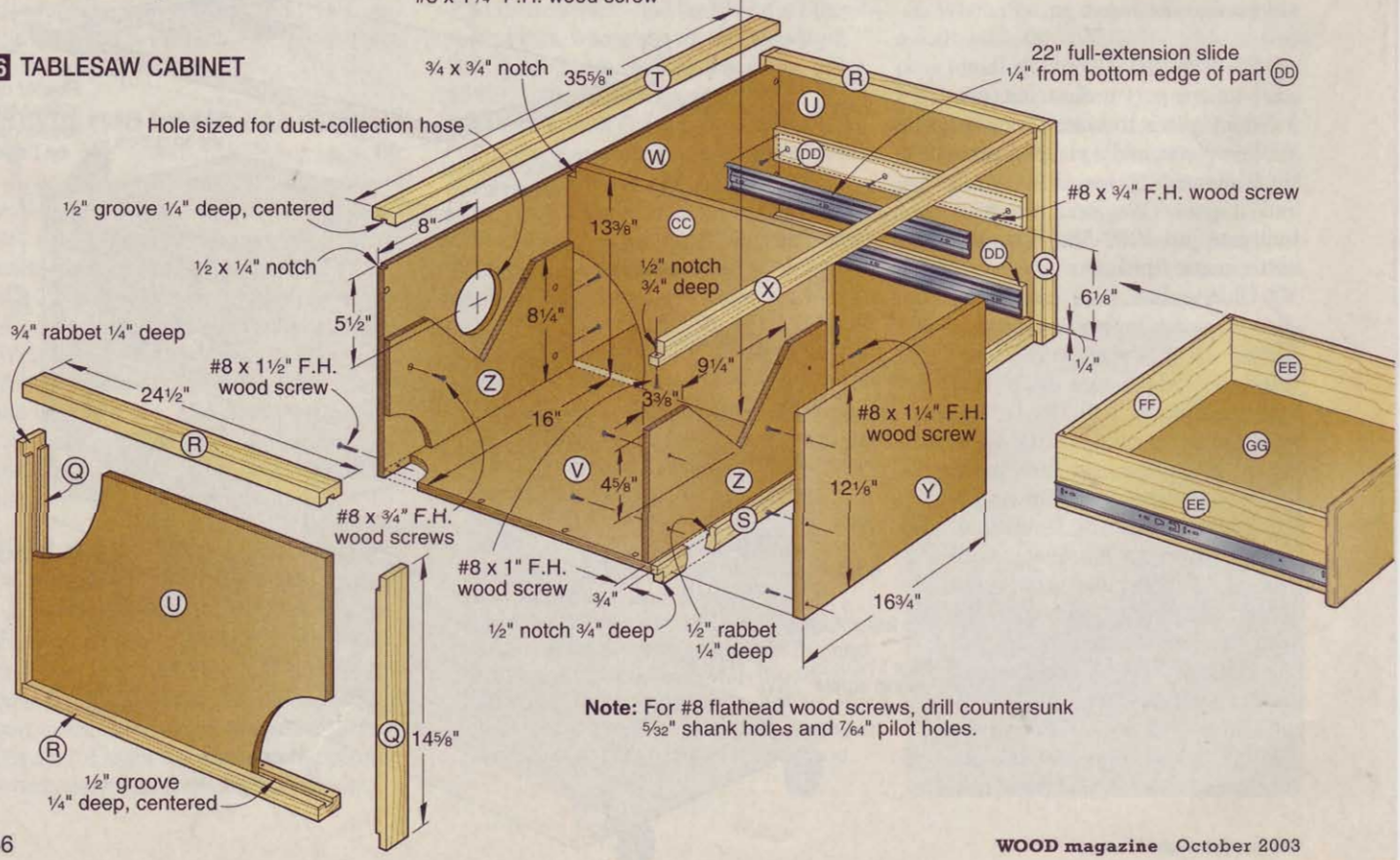

Note: For #8 flathead wood screws, drill countersunk 5⁄32" shank holes and 7⁄64" pilot holes.

7 TABLESAW CABINET DRAWER

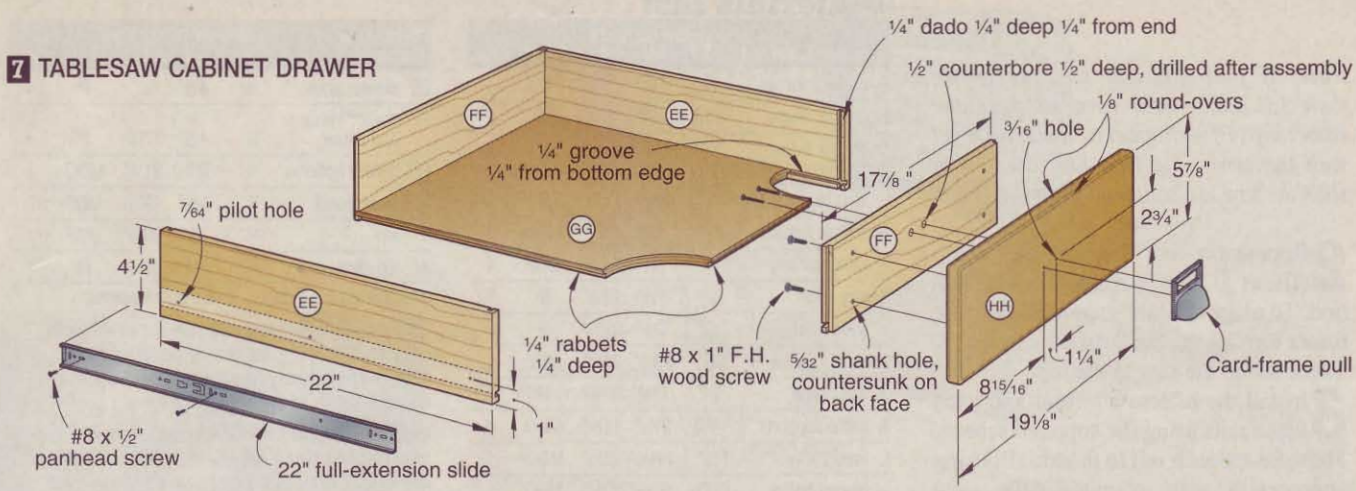

where shown on **Drawing 7**. Following the same process as for the router-cabinet drawer, machine the grooves, rabbets, and dadoes in the parts, where shown on **Drawings 3** and **7**. Then, glue and clamp the drawers together.

3 Separate the 22" full-extension slides. Cut a 6⅜"-wide spacer from scrap for positioning the upper drawer's cabinet slides. Mount a slide on the upper drawer cleat (DD), as shown in **Photo D**. Then, mount the opposing slide on the divider (CC) with the slide's end ¾" back from the front face of the front panel (Y). In the same way, install the bottom drawer's cabinet slides, positioning them ¼" above the cabinet's bottom.

4 Mount the drawer slides on the drawers, where shown on **Drawing 7**. On the drawers' undersides, mark one drawer "Top" and the other "Bottom."

5 Cut the false fronts (HH) to size. Rout ⅛" round-overs along their front and back edges. Install the bottom drawer; then, position a false front on it, as shown in **Photo E**. Drive the screws through the drawer front (FF) into the false front. Next, install the top drawer, and reposition the bottom spacer on top of the lower drawer's false front. Now, position and attach the upper drawer's false front.

6 To attach the card-frame pulls to the drawers, drill 3/16" holes through the false fronts (HH) and drawer fronts (FF), where dimensioned on **Drawing 7**. Counterbore the holes in the drawer fronts, where shown. (The counterbores allow you to use the screws supplied with the pulls.) Attach the pulls.

Mount the tablesaw cabinet, and add its top

1 Position the tablesaw cabinet on the mobile base, where shown on **Drawing 5**, flush with the base's edges and tight against the router cabinet. Drill angled mounting holes in the tablesaw cabinet's left bottom rail (R), and drive the screws.

2 Cut the top (II) and top cleat (JJ) to size. Round over the top's edges, where shown on **Drawing 5**. Drill mounting holes in the cleat. Then, glue and screw the cleat to the right end of the top, flush with its bottom and centered side-to-side.

3 Position the top/cleat assembly (II/JJ) on the tablesaw cabinet, locating the cleat between the router cabinet's stiles. Place your tablesaw (without legs) on the top with its tabletop tight against the router top (P) and flush with its front and back edges.

4 Reach inside the saw, and mark the base's opening on the top (II) over the baffled dust-collection compartment. Mark, also, the mounting hole locations on the top. Remove the saw. Now, drill a ¾" blade start hole inside the marked area, and jigsaw the opening to shape.

5 Drill pilot holes centered on the marked locations for the screws you'll use to attach the saw. (We used #12×1½" panhead screws with ¼" flat washers, and drilled 5/32" pilot holes.) Drive a screw into each hole, and remove it. This makes it easier to install the screws later when fastening the tablesaw to the top (II).

6 Drill mounting holes in the top (II) and top cleat (JJ), where shown on **Drawing 5**. Drive the screws.

Apply finish, and complete the assembly

1 Remove the drawers and hardware. Sand the assembly to 220 grit. Then, apply two coats of satin polyurethane, sanding to 220 grit between coats. Reinstall the hardware and drawers.

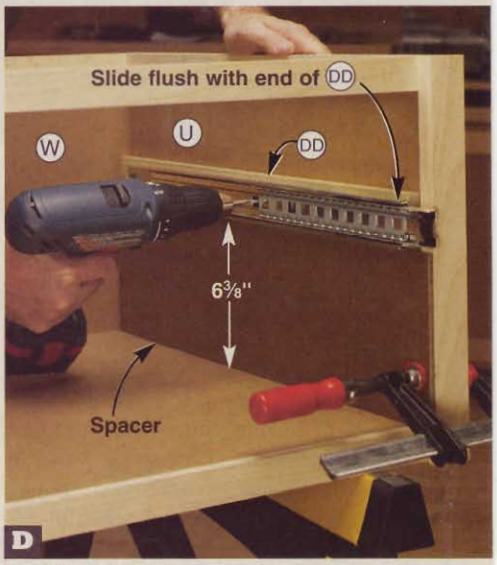

Position the cabinet slide on the spacer, flush with the end of the drawer cleat (DD). Drill the mounting holes, and drive the screws.

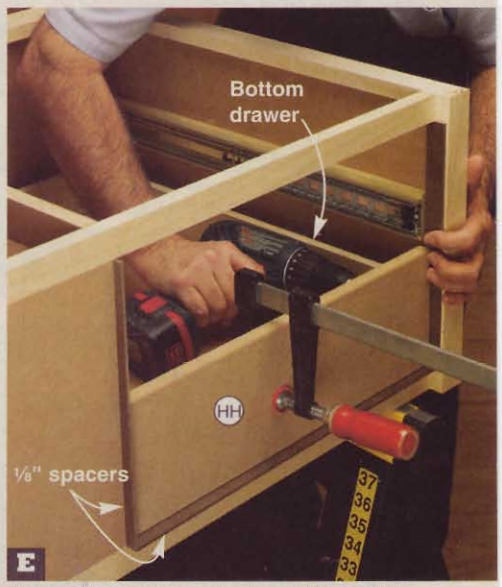

Place ⅛" spacers along the false front's sides and bottom edge. Clamp the front to the drawer, and drive the screws.

Note: If your tablesaw measures more than 13" tall, you'll need to raise the router top (P) with spacers to make it level with the saw's cast-iron top rather than shim the saw, as explained in the next step.

2 Reposition your tablesaw on the top (II), as in Step 3 of the previous section. To make the saw's top level with the router top (P), see the article on *page 98*. Then, fasten the saw to the top.

3 Install the tablesaw's front and back fence rails using the supplied screws. Then, fasten each rail to the top (P) using appropriate size screws. (We used #14×1½" flathead wood screws, and drilled 3/16" pilot holes.) You may need to drill holes in your rails to center the screws on the top.

4 Mount a safety switch for the router in a convenient location near the cord-access hole. We mounted the Rousseau safety power switch, shown on **Drawing 1**, under the tablesaw's back rail.

5 Install your router fence, insert plate, and router. Feed your router's cord through the 1¼" hole in the router cabinet's side panel, and plug it into the router switch's receptacle. Now, move your work center into position, make your dust-collection connections, plug in the tablesaw and router-switch power cords, and make something beautiful.

Written by **Owen Duvall** with **Chuck Hedlund**
Project design: **Kevin Boyle**
Illustrations: **Roxanne LeMoine**

Materials List

Router Cabinet	FINISHED SIZE T	W	L	Matl.	Qty.
A upper front rail	¾"	1¼"	23½"	M	1
B drawer cleats	1½"	2¼"	30"	LP	2
C drawer sides	½"	2"	27½"	P	2
D drawer front and back	½"	2"	19"	P	2
E drawer bottom	½"	19"	27"	MDO	1
F router-bit tray	¾"	7½"	18½"	MDF	1
G tray edge	¾"	1½"	18½"	M	1
H shelf cleats	½"	1½"	29¼"	P	2
I shelf	¾"	23½"	29¼"	MDF	1
J shelf edge	¾"	2¼"	23½"	M	1
K baffle supports	½"	9⁹⁄₁₆"	11¾"	MDO	4
L fixed baffle	½"	14⁹⁄₁₆"	23½"	MDO	1
M hinged baffle	½"	13¹¹⁄₁₆"	22⅜"	MDO	1
N hinged-baffle mounting block	¾"	¾"	22½"	M	1
O turn buttons	¼"	⅝"	1½"	M	2
P* top	1½"	27"	51"	LMDF	1
Tablesaw Cabinet					
Q stiles	¾"	1½"	14⅝"	M	4
R rails	¾"	1½"	24½"	M	4
S lower front rail	¾"	1¼"	36⅝"	M	1
T back rail	¾"	2"	35⅝"	M	1
U side panels	½"	13⅝"	24½"	MDO	2
V bottom panel	½"	23"	36⅝"	MDO	1
W back panel	½"	13⅜"	36⅝"	MDO	1
X upper front rail	¾"	1¼"	36⅝"	M	1
Y front panel	¾"	12⅛"	16¾"	MDF	1
Z baffle supports	½"	8¼"	16"	MDO	2
AA left baffle	½"	11⁵⁄₁₆"	22¾"	MDO	1
BB right baffle	½"	10¾"	22¾"	MDO	1
CC divider	¾"	13⅜"	22¾"	MDF	1
DD drawer cleats	½"	2¼"	22¾"	P	2

Tablesaw Cabinet	FINISHED SIZE T	W	L	Matl.	Qty.
EE drawer sides	½"	4½"	22"	P	4
FF drawer fronts and backs	½"	4½"	17⅞"	P	4
GG drawer bottoms	½"	17⅞"	21½"	MDO	2
HH false fronts	¾"	5⅞"	19⅛"	MDF	2
II top	¾"	27"	39⅜"	MDF	1
JJ top cleat	¾"	1½"	22½"	M	1

*Part initially cut oversize. See the instructions.

Materials key: M–maple, LP–laminated poplar, P–poplar, MDO–medium-density overlay plywood, MDF–medium-density fiberboard, LMDF–laminated medium-density fiberboard.

Supplies: Spray adhesive; contact cement; five-minute epoxy; #5×½", #8×¾", #8×1", #8×1¼", #8×1½", and #8×1¾" flathead wood screws; #8×½" panhead screws; 27×51" plastic laminate; 2×1½" butt hinges (2). To mount the tablesaw and router switch shown: #12×1½" panhead screws (4), ¼" flat washers (4), #14×1½" flathead wood screws (6), #8-32×½" round-head machine screws (2), #8-32 nuts (2), and #8 lock washers (2).

Blades and bits: Dado-blade set; ⅛" round-over, flush-trimming, and chamfer router bits.

Buying Guide

Hardware. 22" full-extension slides with screws, no. 02K30.22, $11.20 pr. (2 pr.); 28" full-extension slides with screws, no. 02K30.28, $13.60 pr. (1 pr.); 4' aluminum-extrusion miter track, no. 12K79.05, $11.95; card-frame pulls, no. 01A57.65, $2.80 each (2). Call Lee Valley, 800/871-8158, or go to www.leevalley.com.

Cutting Diagram

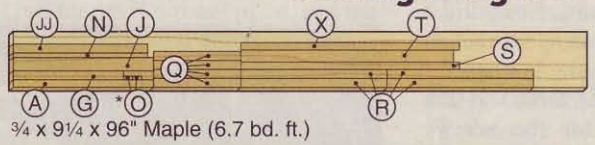

¾ x 9¼ x 96" Maple (6.7 bd. ft.)

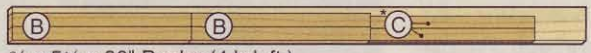

¾ x 5½ x 96" Poplar (4 bd. ft.)
*Plane or resaw to the thicknesses listed in the Materials List.

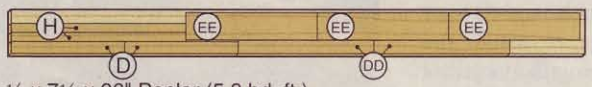

½ x 7¼ x 96" Poplar (5.3 bd. ft.)

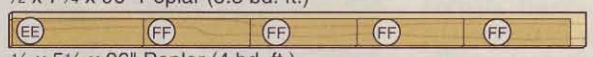

½ x 5½ x 96" Poplar (4 bd. ft.)

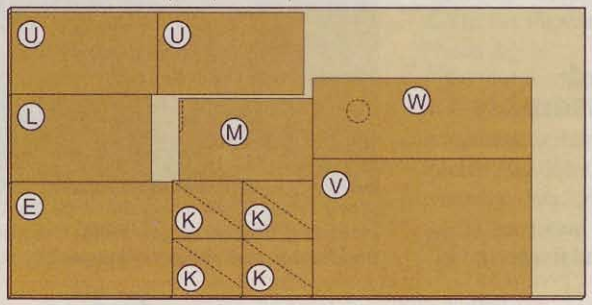

½ x 48 x 96" Medium-density overlay plywood (MDO)

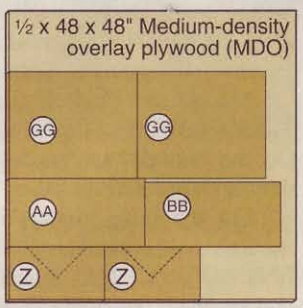

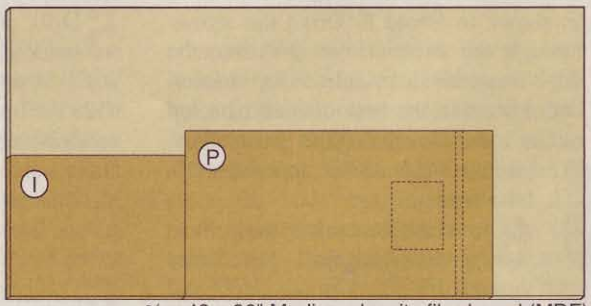

¾ x 48 x 96" Medium-density fiberboard (MDF)

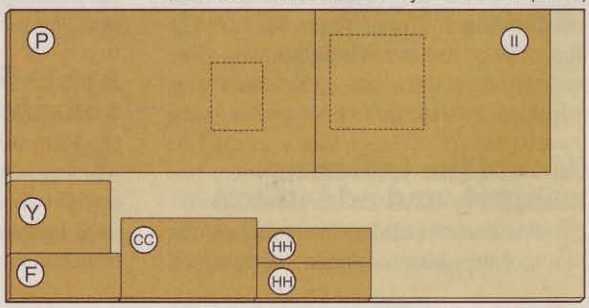

¾ x 48 x 96" Medium-density fiberboard (MDF)

how to table-mount your router

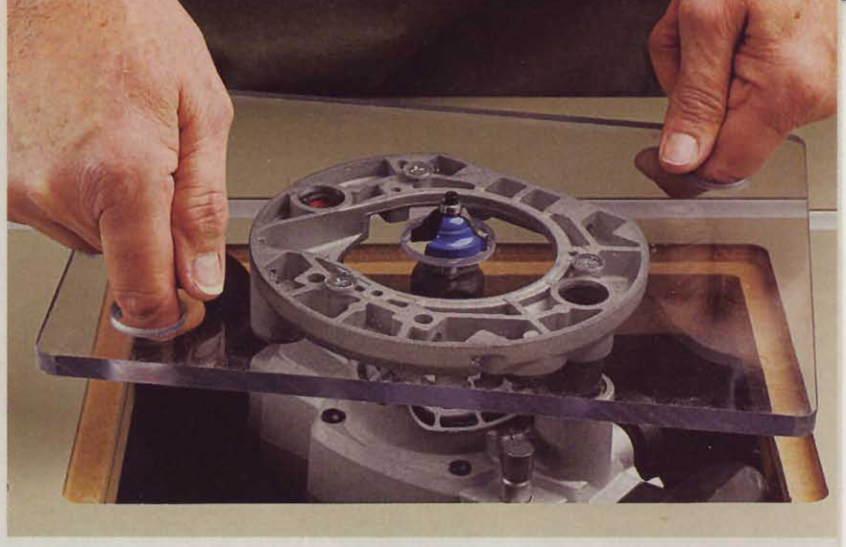

Whether you make a router insert plate or buy one, you can attach it to your tool and install it in your table with just a few easy steps.

Precision counts when you mount a router under a table. Ideally, you want the router and its insert plate to lift out easily when necessary, and to stay solidly in position while you rout.

If you're using a commercial insert, such as the Rousseau model used in the Idea Shop 5 mobile sawing/routing center on *page 62*, or an insert-based router lift, proceed to the "Cut the table opening" section. If you are making your own insert, start right here.

Prepare the insert

1 Buy a ⅜×12×12" piece of acrylic or polycarbonate plastic from a woodworking store or catalog. (Woodcraft carries acrylic [item 16L71] for $9.99 and polycarbonate [16L72] for $15.99. Visit www.woodcraft.com, or call 800/225-1153.) Either type works fine; acrylic is somewhat stiffer, while polycarbonate offers greater resistance to shattering. You can use the piece as is, or trim it to your preferred dimensions with a fine-tooth laminate- or plywood-cutting blade in your tablesaw. Check for squareness at every corner.

2 Chuck a 1" Forstner bit in your drill press, and drill a pair of finger holes near opposite corners of the insert to help with quick installation and removal. We centered ours 1½" from each of the adjacent sides. Ease the top and bottom edges of the holes, using a ⅛" round-over bit in your router.

3 With the protective covering still in place on the insert, use a pencil or marker to draw diagonal lines from opposite corners of the insert to find the center. Install a V-groove bit in your router, and position the router so the bit's point contacts the center, as shown at *right*. Place the router so that the handles fit within the perimeter of the insert plate and therefore through the planned insert opening. Trace around the router's plastic subbase.

After you trace around a subbase like this one with one flat edge, realigning the subbase for drilling is simple. But if the subbase is completely round, stick a piece of masking tape on it, mark it with the pencil, and make a matching mark on the plate, as shown here for demonstration only.

4 Now, remove the subbase from your router, and place two strips of double-faced tape on its face. Position it on the insert to match the traced outline. Using a self-centering bit, drill holes through the plate at each of the subbase's mounting holes, as shown in the photo *below*.

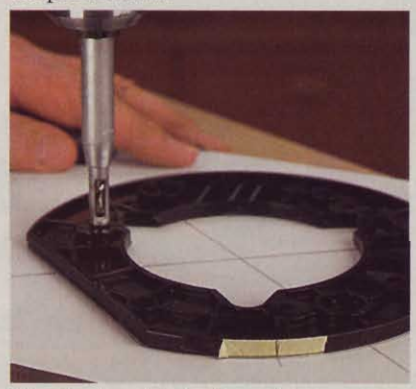

Size the insert holes to match your router's mounting screws. After drilling through the insert, flip it over, and countersink the holes for flathead mounting screws, or counterbore them for panhead mounting screws.

5 Select a Forstner bit with a diameter ⅛" larger than the largest router bit you intend to use (we used a 1½" bit). Chuck it in your drill press, and drill a through hole at the previously marked centerpoint, as shown *below*.

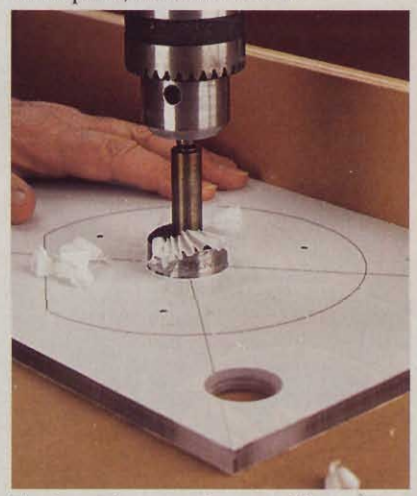

The less clearance between bit and insert, the better. For safety and convenience, you might make two or three inserts with different-size bit holes.

Cut the table opening

1 Position the insert on your router table, centered from side to side, and far enough from the table's front edge to allow for a miter-gauge slot and an adequate work area. Trace around it with a pencil, as shown at *right*.

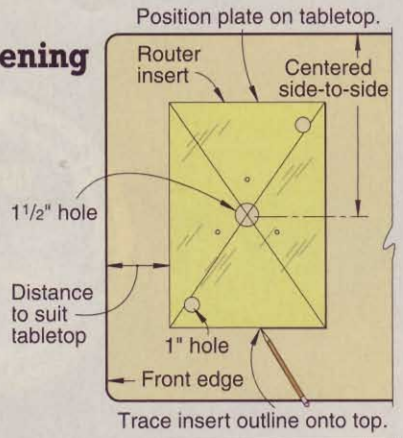

2 Draw lines ½" inside the insert outline to form a smaller rectangle, as shown at *right*. These inside lines serve as cutting lines. Drill a start hole for your jigsaw blade, and carefully cut out the opening.

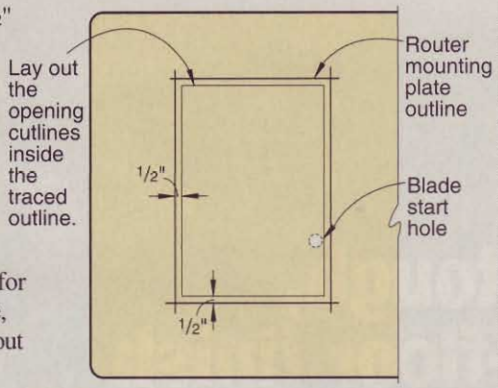

3 Now, prepare to rout a rabbet that will support the insert. Cut 5"-wide guide-board stock from flat ¾" material. Medium-density fiberboard (MDF) is a good choice. Crosscut five guide boards of equal length (you'll use one as a test piece); the length should be slightly more than the longest edge of the plate outline plus 5". Apply two long strips of cloth-backed, double-faced tape to the bottom of each of these guide boards.

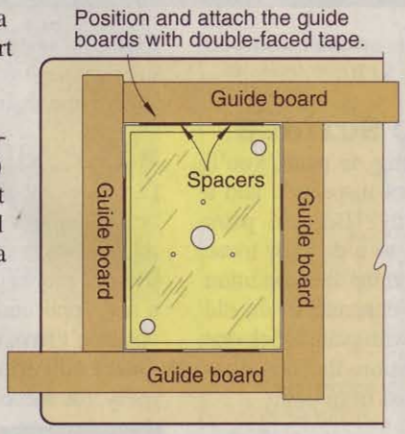

Align your insert with the traced outline, and place the guide boards as shown *above right*, using single playing cards as spacers between the insert and the guide boards. These spacers create enough extra room to ensure that your insert is easily set in place and removed, without allowing any significant movement while routing. Tap down on the guide boards with a rubber mallet or apply pressure with clamps to bond the tape firmly. Remove the insert.

4 Next, affix your test guide board on a piece of scrap with double-faced tape, and then clamp the assembly to your workbench. You'll use this test piece to sneak up on the needed rabbet depth for an exact flush fit.

5 Now, you need to put a pattern-cutting bit or dado-cutting bit in your router. Such a bit features a top-mounted pilot bearing, as shown at *right*. The diameter of the bit determines the radius to be shaped at each corner of the opening, and the length of the bit must be appropriate to the planned depth of the rabbet and the thickness of the guide boards. For example, to make a rabbet ⅜" deep with ⅜" radiused corners, we used Woodline USA's WL-1011-D dado-cutting bit with a ¾" diameter and a 7⁄16" cutting length. Call 800/472-6950 to order this bit, priced at $12 plus shipping.

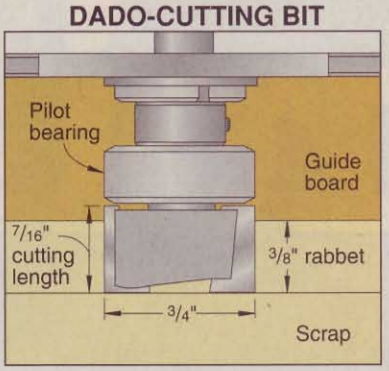

6 With the router base resting on the surface of the guide boards, adjust the cutting depth to rout ⅛" deep into the tabletop. Then, working clockwise as shown at *right*, guide the pilot bearing along the inside edge of the guide boards and begin to rout the rabbet. Also rout along the edge of your test piece, as shown *below right*. Lower the bit ⅛", and make a second pass on both the router table and the test piece. Again lower the bit ⅛", but this time rout only partway along the test piece and hold the insert in that rabbet to check the fit. Adjust the depth if necessary, and test again. Repeat this process until the insert rests flush with the top of the test piece. Now, make a final pass on the router table for a perfect fit.

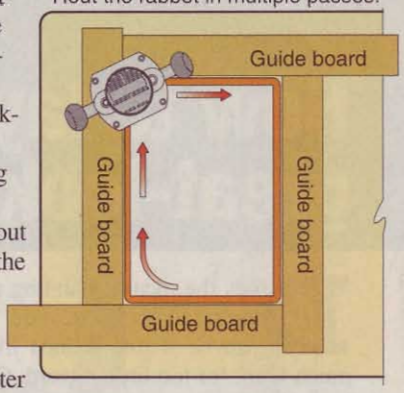

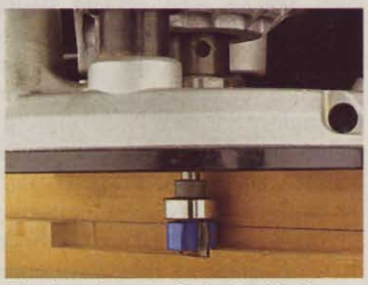

The insert must sit flush with the tabletop so workpieces don't catch as they move past the router. Using a test setup guarantees that you'll hit the correct rabbet depth.

Install the insert and router

1 Sand the corners of your insert so they match the radiused corners of your rabbet. Install the insert on your router, replacing the subbase mounting screws with longer ones if necessary. Make sure to buy screws with the same diameter and thread type as the originals.

2 Peel off the guide strips around the table opening. Set the insert and router into it, and you're ready for action.

on a roll

How to lay down a tough, great-looking shop-floor finish

Does the idea of painting a concrete floor leave you cold? Maybe it just sounds like too much work for too little reward. Or perhaps you've seen painted floors that have peeled and look bad.

Guess what? A painted floor beats a bare one for several reasons. If you use the right paint (see "Figuring out floor paints," *opposite page*) and apply it correctly, your floor will look terrific, clean up easily, and resist wear for many years.

Why does concrete deserve to be coated? It seems impenetrable, but concrete is porous, and happily sucks up liquids and hangs on to small solids. That means spilled stain, motor oil, and sawdust will make themselves at home in the pores. And groundwater from under the slab can seep up, too, creating cold, clammy floors. But paint seals those pores to block out moisture and make it easy to sweep dust and wipe up liquids.

Note: *The floor you see rolled out is from our 15×22' Idea Shop 5* (page 44). *We used two EPOXYShield kits from Rust-Oleum that come complete with the paint, cleaner, and an instructional video. The total cost: $120.*

Prepare the surface

Before you start rolling on paint, you'll need to do an up-front inspection and a bit of prepwork. Why? Because paint simply won't adhere to a dirty or loose surface. To start, examine the condition of your floor. Is the concrete fresh, old and dingy, or coated with paint? Pick one of the following conditions that describes your floor, and proceed from there.

■ New concrete

Freshly poured concrete presents the fewest hassles. First, let it cure for at least four weeks. Then, tape down a 2' square of plastic. Let it sit for 24 hours, and check for moisture underneath. If you find condensation, the floor needs more curing time. If the plastic comes up dry, you can sweep and wash down the floor with mild detergent, followed by a thorough water rinse. Once the surface dries again, you're ready to coat it, following the manufacturer's directions.

■ Old, dirty concrete

Cleaning oily, stained concrete isn't exactly fun, but it may not be as tough as you think. Even thick grease stains wash away with the proper cleaner, *below*. It may take a few applications, but bear in mind that you don't have to make the concrete look like new. As long as it's clean, you're ready for the next step. Use a chemical

Biodegradable Simple Green removes many oil and grease stains. Stubborn ones, as well as rust, may require a stronger cleaner, available where paints are sold.

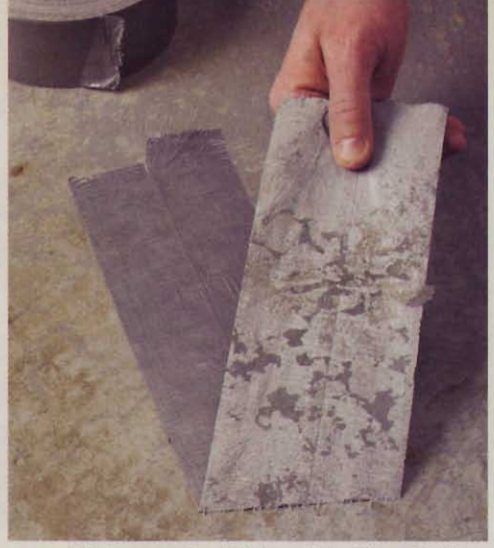

Stick a couple of strips of duct tape to the floor, and then rub to adhere it well. Peel the tape back quickly and look for chips. If paint comes up, you'll need to scrape and strip either spots or the whole floor.

Test the stripper on a small area to gauge its effectiveness. Allow adequate time to activate before scraping it away. If necessary, apply a second coat and scrub with a steel brush to get down to bare concrete.

Paint the floor in manageable sections, about 4' to 5' square. Work in rows, always keeping a wet edge between adjoining areas and overlapping the previously painted areas by a few inches.

etching solution (available at paint stores) to give the surface a bit of "tooth." Once you have etched the floor, wash and rinse it as you would fresh concrete.

■ Painted concrete

A floor that's been painted before may present the biggest challenge. That's because the paint you apply won't be sticking to the concrete, but to the previous paint layer, instead. If that layer is well-bonded, you have no problems. If loose, it's got to go. Perform a tape test, *above*, to check the old paint.

Loose paint requires a two-step attack plan: Scrape and then strip. Use a scraper on a long handle to remove as much of the old paint as possible. Remove the rest using a chemical stripper that's designed to work on concrete, *above*. Rinse the surface thoroughly to neutralize the stripper, and then treat the surface like old, dirty concrete.

Lay down a new coat

With the prepwork done, painting is easy. Exact procedures vary depending on the product, but a few general rules apply:

While you're cleaning and/or stripping the surface and while painting, make sure you provide adequate ventilation. Fumes from these products can be potent. Walk on the clean floor as little as possible to prevent contaminating the surface.

Start painting by brushing a 4"-wide strip around the perimeter. Then paint the main floor, *above*. Don't dally as you work. Epoxy paints, especially, have an "open time" of just one or two hours before they lose their workability.

Written by **David Stone**

Figuring out floor paints

Before buying concrete paint, make sure you understand what you're getting. For a shop or garage, stay away from "porch and floor" paints. These are designed only to hold up to foot traffic. Sliding heavy machinery around will scrape them off, and hot car tires will peel them away from the surface. Paints designed specifically for garage floors are your best choice. They're available in three types:

Latex is the easiest to apply. This type of paint costs about $20 per gallon, which should cover approximately 250 to 300 square feet. You'll also need to prime the surface as recommended. Manufacturers have improved these paints greatly, making them more durable and less susceptible to "hot-tire pickup."

One-part epoxy paints offer increased durability over latex. They cure when exposed to air, adhere better than latex, and resist wear well. Expect to pay $30 per gallon to cover 300 square feet. Again, a primer coat may be required.

Two-part epoxies come with paint and a hardener that you mix together right before you're ready to coat the floor. These generally cost more (about $50–$60 per gallon), but come the closest to the industrial coatings applied in factories and other high-use areas. A gallon covers about 250 square feet. Primer isn't usually necessary. Our kit came with small color flecks that we tossed on over the wet paint. They add a bit of traction, and dress up the floor, too.

cabinet-style tablesaws

CAUTION: Check your bank balance before reading further—you may find yourself unable to resist buying one of these powerful saws.

Thinking about upgrading from your contractor-style tablesaw to the king of the beasts—a 3-hp cabinet-style saw? It's every woodworker's dream. And why not? These durable machines are built to serve for a lifetime, with powerful 220-volt motors and hefty cast-iron internal components that dampen vibration to virtually nil. And, once aligned, a cabinet saw may never require adjustment again.

To help you move from being a dreamer to a doer, we gathered seven 3-hp saws, each equipped with 49"-plus fences, and put them to the test. In checking the drive-train components, we found that none of the saws exceeded a stellar .001" arbor-flange runout, and all vibrated less than .001" in any direction. Read on to see what else we learned.

4 things that matter most in a cabinet-style saw

■ **Power and cut quality.** When it comes to raw cutting power, these machines have it in spades. All of the tested models ripped through 2"-thick red oak at about 12' per minute without batting an eye. However, we found noticeable differences in the quality of the cut left behind.

We used new Freud 40-tooth combination blades on each saw, then highlighted any blade scoring by rubbing the just-cut edge with colored chalk (see photos, *below*). The Delta 36-L31X-U50 and

Continued on page 76

These three samples show the range in cut quality of the tested saws. The pink chalk on the Jet sample shows heavy blade scoring; the Craftsman, moderate scoring; the General left a consistently smooth surface.

Cabinet, contractor, or hybrid: Know the difference

Cabinet-style tablesaws look different from contractor-style saws, but the differences run far deeper than appearance alone, as you can see from the photos *below*. In recent years, DeWalt and Jet have introduced "hybrid" tablesaws, such as Jet's Super Saw, shown at *bottom*, that blur the lines between cabinet and contractor saws. These machines look like a cross-breed with the motor hanging inside a partially enclosed cabinet, and integral legs that run to the bottom of the table. Their mid-range power and trunnions belie their true identity, though: The trunnions attach to the underside of the tabletop like a contractor-style saw.

CABINET-STYLE SAW

INSIDE:

- 220-volt motor of at least 3-hp mounts inside cabinet and transfers power to the arbor by two or three belts.
- Heavy-duty cast-iron components rarely need adjustment.
- Trunnions mount to cabinet, so blade alignments are made by merely shifting the tabletop on the cabinet.

OUTSIDE:

- Enclosed base provides stability, reduces noise, and improves dust collection.
- Cast-iron extension wings.
- Beefy handwheels and fine internal machining ease blade-tilt and elevation operations.
- Magnetic power switch prevents accidental startup when power is restored to saw.

CONTRACTOR-STYLE SAW

INSIDE:

- 1- to 1½-hp motor hangs from back of machine and drives arbor with one belt.
- Trunnions mount to underside of table, and require more frequent adjustment, usually involving reaching up inside the saw with a hammer and wrench.

OUTSIDE:

- Stamped-steel extension wings (typical).
- Open-base legs are less stable than an enclosed cabinet.
- Lightweight handwheels require more effort to turn.
- Mechanical switch can cause saw to start unexpectedly when power is restored.
- Open cabinet typically reduces dust-collection efficiency.

HYBRID SAW

INSIDE

- 1¾-hp motor hangs inside cabinet, reducing noise.
- Trunnions mount to underside of table, like a contractor-style saw.

OUTSIDE

- Integral legs more rigid than bolt-on base.
- Beefed-up components include cast-iron extension wings and handwheels, and upgraded fence.

General 650-T50-M2M left the smoothest cuts, with almost invisible scoring. The Jet JTAS-10XL50-1 and Powermatic Model 66 showed significant scoring. After learning of our test results, Powermatic's Doug Kullmar told us the scoring occurred only under heavy load (such as ripping thick red oak), and says they've since corrected the problem. We tested another Model 66 and found it much improved.

■ **Fences.** Most of the saws come with so-called "Biesemeyer clone" fences in homage to the much-revered T-square style fence. (Delta offers a true Biesemeyer as an option.) Unfortunately, only one of the six clones we tested lives up to the reputation of the original: the one from General. In our deflection test—pulling the outfeed end of the fence away from the blade with 20 lbs of pressure—the General fence deflected less than 1/64" at the arbor location. (See the photos at *top right*.) Only the Shop Fox W1677EXT2, with its fence that locks to both the front and rear rails, equaled that number.

Speaking of the Shop Fox fence, it's also unique in that it rides the rails on three pulley-like bearings, effortlessly floating about 1/16" above the tabletop. This smooth-sailing design has its drawbacks, however. First, you can't simply lift the fence off the rails at any point: You must run it to the end of the rails and remove the stop that prevents it from accidentally sliding off. And, the saw's blade guard interferes with fence travel (see photo, *right*) preventing narrow rip cuts. Shop Fox's Phil Spinelli says that discourages dangerous thin rips, and that most saw fences don't get much closer with the guards properly installed.

Another key difference in the fences on these saws is the flatness of their faces. Slick plastic (HDPE) fence faces proved more prone than other materials to bowing where the face attaches to the main fence body. On our test model, the Jet Xacta fence bowed toward the blade .008" in one place, and out .003" in two other spots, requiring careful shimming to make it flat.

■ **Tables and extension tables.** At these prices, you'd expect to get dead-flat cast-iron tables with super-smooth grinding, and these saws don't disappoint. Measured across the diagonals and in line with the blade arbor, we found all of the tables exceptionally flat—within .002" of perfect across the board, with only a couple of small, isolated spots out by only .004". The quality of the grinding is also excellent, with the tables of both the General and Powermatic saws ground to a near-mirror finish.

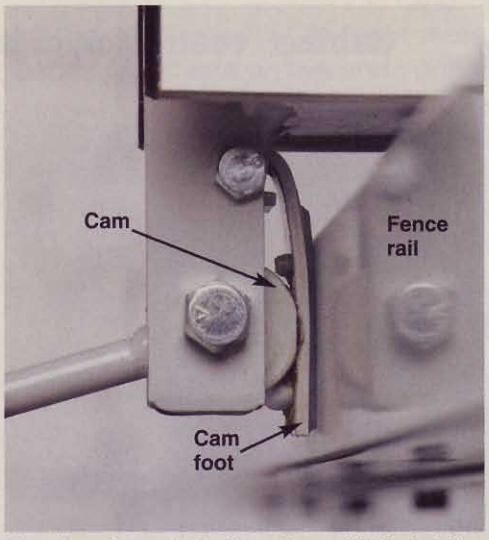

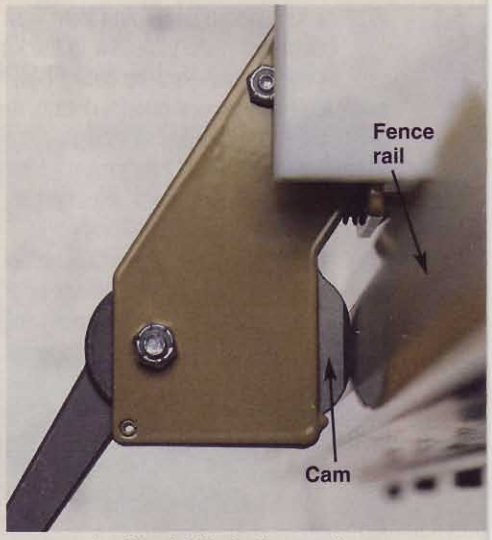

To reduce fence deflection, General (left photo) uses a cam foot to distribute the cam's clamping pressure over the full height of the fence rail. Powermatic (right photo) and Jet clamp with only the curved face of the cam, making far less surface contact with the rail.

The wooden extension tables tell a somewhat different story. Plywood tables with bracing beneath tend to be flatter and more square than particleboard tables, but even a 1/16" crown in the center of an extension table, such as we found on the Jet, didn't effect the saw's accuracy or cut quality. The Craftsman 22964N doesn't come with an extension table.

■ **Dust collection.** All of the tested saws come equipped with built-in 4" dust-collection ports. All but the Powermatic also have an inclined floor to direct dust toward the dust port. When used with a dust collector, Delta's design proved most efficient, evacuating about 80 percent of the debris, partly because of its rear-mounted port. The blade flings dust directly toward the port. By contrast, only about 30 percent of the dust generated on the Powermatic made it to the dust collector—the rest stayed inside the cabinet. The remaining saws fell in the 50–60 percent efficiency range.

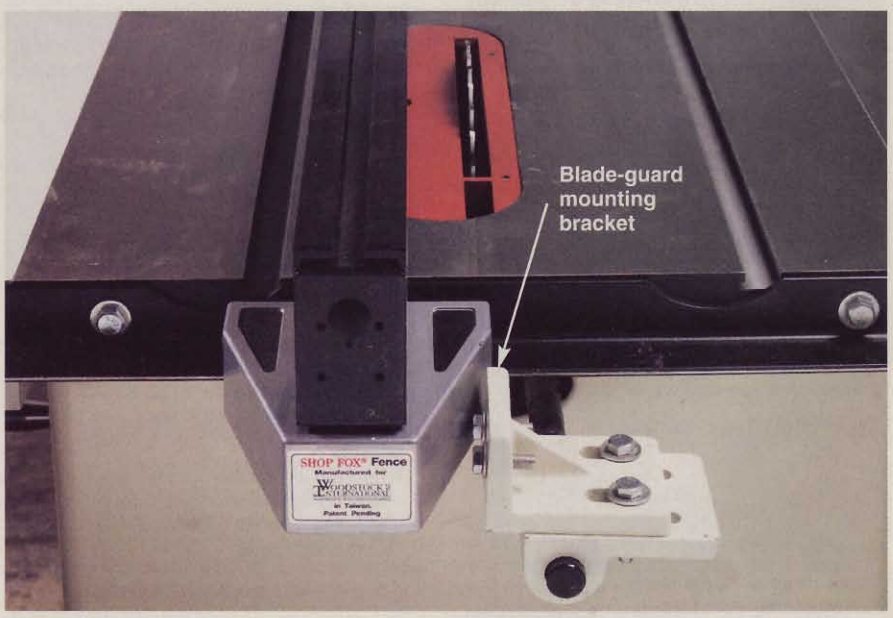

The rear clamp of the Shop Fox fence bumps into the saw's blade-guard mounting bracket, preventing the fence from moving within about 1½" of the blade. (Guard removed from bracket for clarity.)

Saw by saw, here's how we see them

Craftsman 22964N, $1,300

www.sears.com/craftsman, 800/377-7414

High points

- Power switches are designed for safety: A main key switch prevents unauthorized use, with shut-off buttons on both left and right of the saw.
- Comes with a boxed set of tools for saw assembly and adjustment.

Low points

- Fence deflects 1/16" under 20 lbs of pressure.
- Miter slots machined out of parallel, spreading slightly at the outfeed end. (Over the 10" blade length, we measured a .003" spread.)
- Handwheel rotation is fairly stiff.
- Anti-kickback pawls in the blade guard/splitter don't reach the table and barely engage 1/4"-thick stock.
- Fit and finish could be improved. We had to remove burrs from an extension table before installing it, and a rail-mounting bolt protruded into the path of the fence body, limiting its travel. Craftsman's George Gibson attributes both problems to isolated manufacturing errors.

More points

- Fence scale has a magnified cursor, which we like, but the cursor line is wider than the increment lines on the scale.
- Because of the beefy arbor washer and nut, dado sets wider than 1/2" won't fit on the arbor with the washer and the nut fully threaded. Craftsman includes an extra arbor that's longer to accommodate wide dado stacks.

Delta 36-L31X-U50, $1,550

www.deltamachinery.com, 800/438-2486

High points

- USA-made Marathon motor.
- Left a smooth finish on cut boards; second in cut quality only to the General 650-T50-M2M.
- It's the only tested saw that comes with two arbor wrenches for easier blade changing.
- Excellent dust collection.
- Comes with a good quality 50-tooth carbide blade.
- 5-year warranty.

Low points

- Blade guard can't be "parked" up out of the way (to measure fence-to-blade with a tape measure, for example) without removing throat-plate insert.

More points

- We tested this saw with the Unifence (shown at *right*), but it's also available with a Biesemeyer-brand T-square-style fence for the same money.

Delta's Unifence can be mounted as shown for better hand clearance on narrow cuts, or rotated 90° clockwise to better support tall stock. The fence scale, then, has two cursors—one for each orientation—that can be confusing.

- Until further notice, the saw comes with your choice of a Delta mobile base or cordless drill, or Porter-Cable router or brad nailer, at no extra charge.

General 650-T50-M2M, $1,950

www.general.ca, 819/472-1161

High points

- USA-made Baldor motor.
- Left an excellent finish on cut boards.
- The flattest, stiffest T-square style fence in the test deflects only 1/64" at the arbor.
- Comes with handwheels and cast-iron extension wings installed, saving assembly time.
- Prominent "stop" button is easy to find (or hit with a knee) in case of emergency.
- Beefy components throughout, including a metal blade guard and stout splitter.
- Only 9 turns of handwheel required to raise blade to full height.

Low points

- Barebones owner's manual lacks some basic information, such as how to perform miter-slot-to-blade alignment, and wire motor. General's Giles Guerette says they're working to improve that.
- Fence scale marked only in 1/16" increments. (Other tested saws are marked in 1/32" increments.)

More points

- It doesn't come with a power cord, but that allows you to make a cord that's just the right length for your shop.
- Comes with a thin-kerf carbide blade, but the blade isn't up to the quality of the rest of the saw.
- If you can find this saw (U.S. distribution is somewhat limited, but General's Web site has an excellent dealer locator), you'll see why we named it the Top Tool.

Grizzly G1023SLX, $1,125

www.grizzly.com, 800/523-4777

High points

- Plastic-laminate-on-plywood extension table proved squarest and flattest in test.
- Adjustable-width miter-gauge guide bar custom fits to the saw without peening.
- Prominent "stop" button is easy to find (or hit with a knee) in case of emergency.
- Owner's manual includes detailed instructions with clear photos and drawings.
- Long power cord (11'6").
- Lowest-priced saw in test.

Low points

- Solid handwheel blocks view of bevel scale; we had to crouch low to read the scale.
- Fence deflected 1/16" under 20 lbs of pressure, and when adjusted parallel to the blade, it didn't slide along the rail easily. After learning of our test results, Grizzly's Bill Crofutt told us of fence improvements that should address both concerns.

More points

- Fence face required the least shimming of the HDPE fences.
- Two cast-iron extension wings come with the saw, but the wooden extension table replaces the right wing. You could add the extension table to the end of the cast wing, but you'd have to drill new mounting holes in the wooden table. Also comes with an extra set of table legs.

Jet JTAS-10XL50-1 $1,500

www.jettools.com, 800/374-6848

High points

- Very good fit and finish, including well-machined miter slots and smooth-turning handwheels.
- Fence scale accurate throughout full bevel range. (Only this saw and the Shop Fox W1677EXT2 can make that claim.)
- Magnifier on fence makes fine increments on fence scale easier to read.

Low points

- Cut quality suffers from blade scoring, see photo on *page 75.*
- HDPE fence face required shimming to make it flat. Jet's John Otto says the face-mounting screws also can be adjusted in or out to flatten it.
- Fence deflects 3/64" under 20 lbs of pressure.

More points

- Also available with microadjustable T-square style fence, for an additional $100.

DREAM MACHINES: SEVEN 3-HP CABINET-STYLE TABLESAWS

BRAND	MODEL	DIRECTION OF BLADE TILT (1)	TABLES: MAIN TABLE SIZE INCLUDING CAST WINGS (WxL,INCHES) (2)	TABLES: EXTENSION TABLE SIZE (WxL, INCHES)	TABLES: EXTENSION TABLE MATERIAL (3)	FENCE FACE MATERIAL (4)	CHANGE IN BLADE-TO-FENCE DISTANCE FROM 90° TO 45° (5)	NUMBER OF HANDWHEEL REVOLUTIONS TO FULL BLADE HEIGHT	RIPPING CAPACITY (INCHES)	CAPACITY: MAXIMUM CUTTING DEPTH (INCHES)	PERFORMANCE GRADES (6): POWER	QUALITY OF CUT	LACK OF FENCE DEFLECTION	FENCE FLATNESS	MITER GAUGE FIT	EXTENSION TABLE QUALITY (3)	EASE OF CRANKING HANDWHEELS	SPLITTER AND GUARD QUALITY	DUST-COLLECTION EFFECTIVENESS	OWNER'S MANUAL	OVERALL FIT AND FINISH
CRAFTSMAN	22964N	R	36 1/4 x 27	N/A	N/A	AL	-1/32	13	50	3	A-	B	D	C	B	N/A	D	D	C	C-	B-	
DELTA	36-L31X-U50	L/R	40 x 27	44 x 27	P-PAR	AL	-1/32	13 1/2	52	3 1/8	A	A-	B	A	B	A-	A-	C+	A	C-	A-	
GENERAL	650-T50-M2M	L/R	36 x 28	36 x 27 7/8	P-PAR	PL	-3/32	9	52	3 1/8	A	A	A	A	B	C+	A-	A	C	D-	A-	
GRIZZLY	G1023SLX	L	40 1/8* x 27	44 x 26 15/16	P-PLY	HDPE	-1/64	13 1/4	52	3	A-	C	D	A-	A	A-	B	D	B-	A	A-	
JET	JTAS-10XL50-1	L/R	40 x 27	36 x 27	M-MDF	HDPE	0	13	50	3 1/8	A	C	C	D	B-	C+	A-	B+	C	A	A-	
POWERMATIC	MODEL 66	L	38 x 28	35 3/8 x 28	M-MDF	HDPE	-1/32	7	52	3 1/8	A	A-	C	C	C	A	A	C-	D	B	A-	
SHOP FOX	W1677EXT2	L	40* x 27	44 x 27	P-PLY	AL	0	13 1/4	49	3	A-	C	A	A	A	A	A-	D	C	A	A-	

NOTES:

1. (L) Left
   (R) Right
   (L/R) Available either way. Left-tilting version was tested.

2. (*) However, right wing is not typically installed with extension table. In typical installation, size including only left wing is 30 x 27".

3. (M-MDF) Melamine on medium-density fiberboard
   (P-PAR) Plastic laminate on particleboard
   (P-PLY) Plastic laminate on plywood
   (N/A) Extension table not provided

4. (AL) Aluminum
   (HDPE) High-density polyethelene
   (PL) Plastic laminate

5. A negative value means the blade shifts to the left the distance shown with the blade tilted to a 45° bevel.

6. A Excellent
   B Good
   C Average
   D Below average

7. N/A Cord not provided.

Powermatic Model 66 $2,100

www.powermatic.com, 800/248-0144

High points

- U.S.-made Baldor motor.
- Table mounts to cabinet with three bolts instead of four, making it easier to align with the blade.
- Concave-ground gear teeth in height- and bevel-adjustment mechanisms (see photo, *right*).
- Requires only 7 turns of the handwheel to raise blade to full height.
- Split blade guard covers blade completely, even with the blade tilted to 45°.

Low points

- Fine-line cursor scribed into fence bezel can disappear against the light background of the scale.
- Fence deflects 3/64" under 20 lbs of pressure.
- Even when used with a dust collector, about 70 percent of the dust remained inside the cabinet.

The Model 66 is the only saw with concave-ground gears, which operate smoothly and should wear longer than flat-ground gear teeth.

More points

- It doesn't come with a power cord, but that allows you to make a cord that's just the right length for your shop.

Shop Fox W1677EXT2, $1,350

www.shopfox.biz, 800/840-8420

High points

- Unique fence glides easily over the table and locks at the front and rear rails, resulting in less than 1/64" of deflection at the arbor under 20 lbs of pressure.
- Adjustable-width miter-gauge guide bar custom fits to the saw without peening.
- Fence scale accurate throughout full bevel range. (Only this saw and the Jet can make that claim.)
- Long power cord (11'9").
- Owner's manual includes detailed instructions with clear photos and drawings.

Low points

- Solid handwheel blocks view of bevel scale; we had to crouch low to read the scale.
- Fence can't be lifted off the saw; it must be rolled off the end of the rails after removing a safety stop.
- Rear fence mount bumps into guard-mounting bracket, preventing rips narrower than 1½". (See photo on *page 76*.)

More points

- Although its fence has a few foibles, both it and the saw scored high in most of the key performance categories.
- Two cast-iron extension wings come with the saw, but the wooden extension table replaces the right wing. You could add the extension table to the end of the cast wing, but you'd have to drill new mounting holes in the wooden table. Also comes with an extra set of table legs.

	ACCESSORIES (8)						
CORD LENGTH (7)	STANDARD	OPTIONAL	WARRANTY (YEARS)	MOTOR, COUNTRY OF MANUFACTURE (9)	SAW, COUNTRY OF ASSEMBLY (9)	WEIGHT (POUNDS)	SELLING PRICE (10)
6'9"	DA, DI, T		1	T	T	490	$1,300
8'	C	DI, G, M, S, TF, Z	5	U	U	552	1,550
N/A	C, DI		2	U	C	495	1,950
11'6"	DI, L	M	1	T	T	495	1,125
5'6"	C	Di, M, UF	1	T	T	468	1,500
N/A	DI	M	1	U	U	614	2,100
11'9"	DI	M, TF	2	T	T	436	1,350

8. (C) Carbide-tooth blade
(DA) Extra-long dado arbor
(DI) Dado insert plate
(G) Overarm blade guard system
(L) Extra set of table legs
(M) Mobile base
(S) Drop-down splitter
(T) Tool box with tools
(TF) T-square style fence
(UF) Upgrade T-square fence
(Z) Zero-clearance insert plate

9. (C) Canada
(T) Taiwan
(U) United States

10. Prices current at time of article's production and do not include shipping, where applicable.

These cabinet-style saws tested best

General's 650-T50-M2M proved tops in our testing, with a superior fence, excellent cut quality, and an effective blade guard, so we named it the Top Tool. We just wish they'd put half as much effort into their owner's manual as they put into the saw. Remember, though, to check shipping costs from the nearest General distributor as they are few and far between in the U.S. If that proves too costly, we think you'll be happy with the Delta 36-L31X-U50 that delivers comparable cut quality with better dust-collection efficiency, a 5-year warranty, and a free tool, accessory, or $50 rebate, during the current "X5" promotion. (See Delta's Web site for details.)

We found the Grizzly G1023SLX to be a Top Value at $1,125, especially with the planned improvements to its fence. At this price, though, you can buy a high-quality aftermarket fence for $200–$300 and still be money ahead.

Share your opinion of these saws in our tool test forum at **www.woodmagazine.com/cabsaws**

Written by **Dave Campbell** with **John Cebuhar**

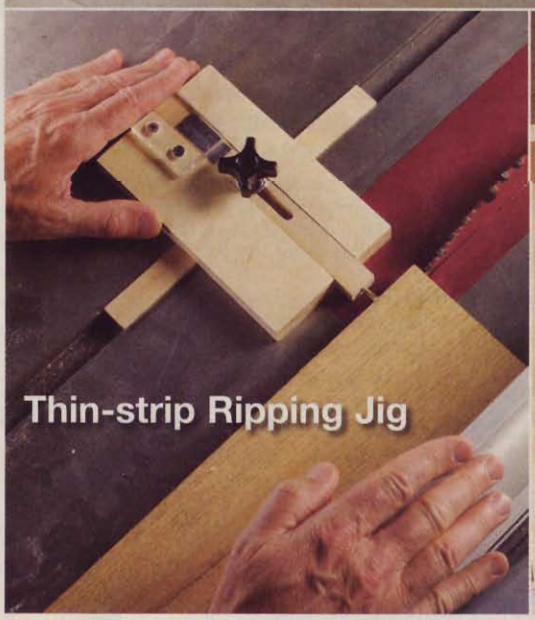

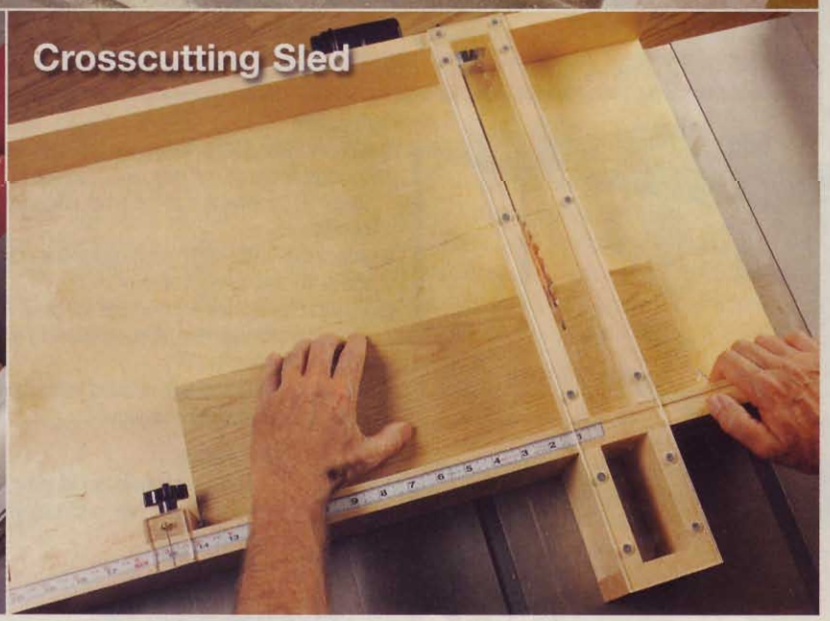

3 must-have tablesaw jigs

Build one or all, and boost your precision for pennies.

Ask a few seasoned woodworkers about the benefits of stocking your shop with a variety of hardworking jigs. They'll likely tell you that some jigs get used again and again, while others gather dust. These three, we guarantee, won't gather dust.

We designed and thoroughly tested this trio of tablesaw jigs, building them from scrap to save on cost. Take an evening or two to make them, and we predict that you'll use the crosscut sled constantly, especially for repetitive cuts. The thin-strip ripping jig and the four-sided taper jig provide you with more specialized services.

See the Buying Guide on *page 85* for the sources of the inexpensive hardware items you'll need. We used Baltic birch plywood and hard maple for the wood parts. If you prefer, you can substitute medium-density fiberboard (MDF) for plywood and another dense hardwood for maple.

We have a bonus for you, too. See *page 96* to build a simple height gauge that complements these jigs perfectly.

Simple, handy thin-strip ripping jig

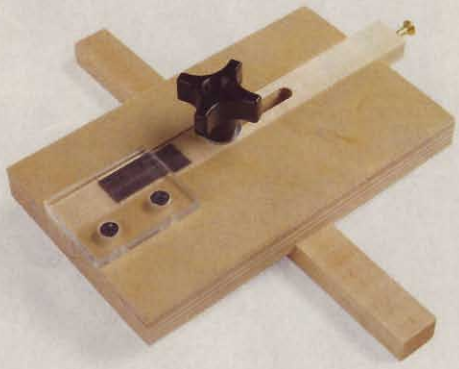

Sometimes you need to rip several thin strips of wood to equal thickness to serve as edging, veneer, or bending stock, but slicing off thin stock on the fence side of the blade could prove unsafe. That's because it becomes awkward to use your blade guard and pushstick when you cut close to the fence. The solution: Run the wide portion of your workpiece between the fence and blade, cutting the strips on the side of the blade opposite the fence. You could accomplish this by measuring for each cut, but that's tedious and inaccurate. This thin-strip ripping jig does the job safely, accurately, and quickly.

1 THIN-STRIP RIPPING JIG

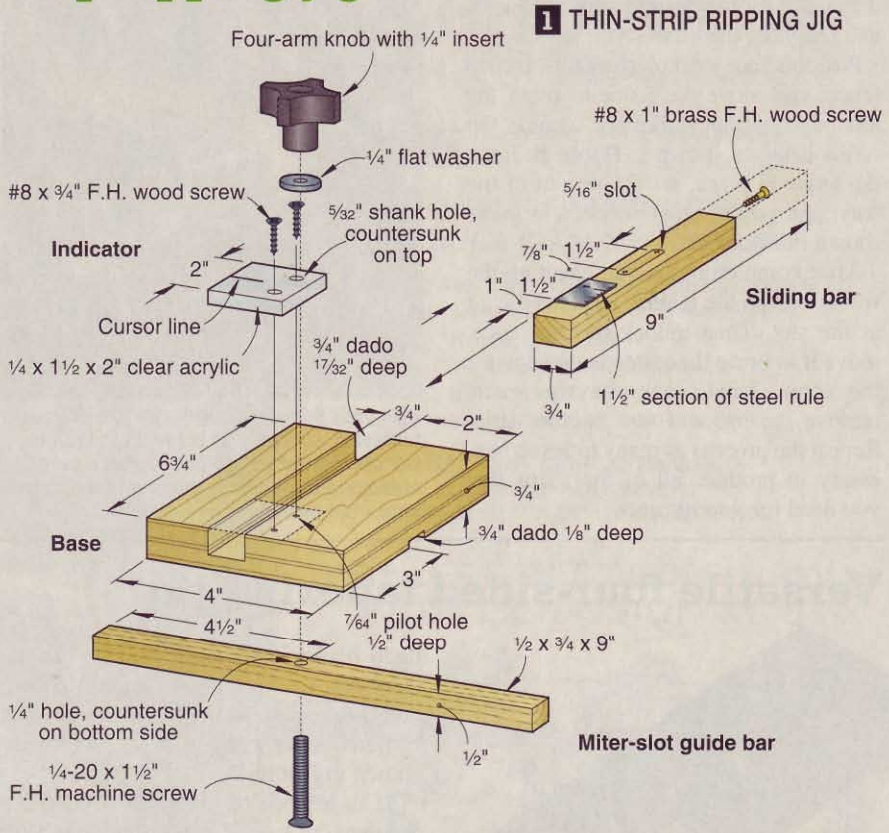

First, build the jig

1 Cut a piece of ¾" plywood to the dimensions shown for the base on **Drawing 1**. Cut a dado on the bottom side of the base for the guide bar, where shown. Now, cut the ¾" dado on the top side of the base for the sliding bar.

2 Cut two pieces of maple to size for the miter-slot guide bar (adjust the dimensions shown if necessary to fit your tablesaw's slots) and the sliding bar. Center the miter-slot guide bar in the bottom dado, and glue it in place. Drill a pair of 5/16" holes in the sliding bar where shown, scrollsaw the material between them, and smooth the inside of the slot with a file.

3 Set the jig in your tablesaw's left miter-gauge slot. Place the sliding bar in the dado with its left end flush with the base. Slide the jig forward, and mark the point where a left-leaning sawblade tooth touches the bar. Make a second mark ½" closer to the base. Remove the bar, and crosscut it at the second mark.

4 Drill a 7/64" pilot hole in the sliding bar, centered on the end you just cut. Drive a brass screw halfway into the wood. (We used brass to avoid any chance of damaging a tablesaw blade.) You'll turn this screw in or out to fine-tune your jig's basic "zero" setting, or to adjust it for a blade of different thickness or with a different tooth set.

5 From the bottom side of the assembly, drill and countersink a ¼" hole through the miter-slot guide bar and base for the machine screw that holds the plastic knob. Sand all of the wood parts to 180 grit, and apply three coats of clear finish.

6 Make a mark 1" from the left end of the sliding bar. Cut the first 1½" from an inexpensive steel rule, align its left end with the mark, and attach it with epoxy.

7 Cut a piece of ¼" acrylic plastic to the dimensions shown for the indicator. Drill and countersink the two mounting holes, and scribe and mark a cursor line, as described in the caption of **Photo A**. Attach the indicator to the base, and add the knob.

To make a cursor, scribe a line across the middle of the acrylic indicator with a sharp knife and a combination square. Color the scribed line with a permanent marker. Wipe off the excess ink with a cloth or paper towel, leaving a fine line.

Now, cut some strips

To cut a thin strip with the jig, place its guide bar in the left-hand miter gauge slot on your tablesaw. Loosen the knob, set the cursor to zero (the bottom end of the rule), and retighten the knob. Slide the jig so that the brass screw head is beside the saw blade. Turn the screw in or out with a screwdriver until the head lightly contacts a left-leaning tooth. Pull

the jig toward you, loosen the knob, set the cursor for the desired strip thickness, and retighten the knob.

Position your workpiece against the rip fence, and move the fence to bring the left edge of the workpiece against the screw head, as shown in **Photo B**. Lock the fence in place, set the jig out of the way, and you're ready to cut a strip, as shown in **Photo C**.

After completing the cut, clean up the workpiece on the jointer. Replace the jig in the slot. Then unlock the rip fence, move it to bring the jointed edge against the screw head, lock the rip fence, remove the jig, and saw another strip. Repeat the process as many times as necessary to produce all of the strips that you need for your project.

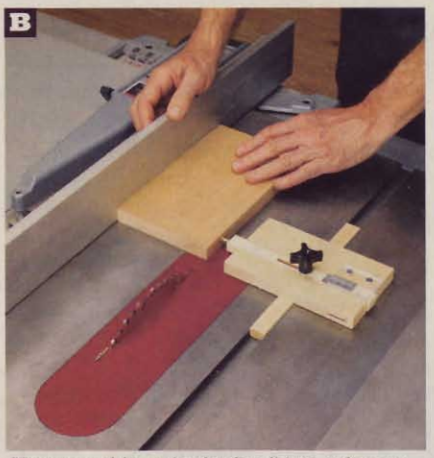

Size your thin-strip ripping jig to suit your tablesaw, so that a 1" screw in the guide bar can contact the blade. Install a zero-clearance throat plate to prevent the sawn strip from falling into the saw.

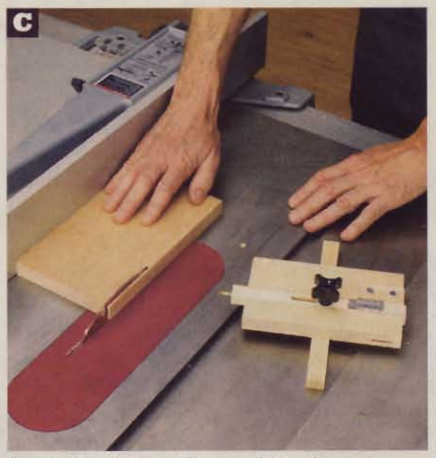

Remove the jig before making the cut so the workpiece doesn't bind between the rip fence and the screw head. Replace the jig in the slot without making any adjustments to set up the next cut.

Versatile four-sided tapering jig

You can taper one side of a table leg without much head-scratching, but tapering all four sides equally presents more of a challenge. With this jig, however, you can cut all four tapers without changing your setup. You simply rotate your workpiece between cuts.

Locate the hold-downs to suit the length of your workpiece. (The pivot block can sit at either end of the jig.) If your tablesaw has a 10" blade, you can handle workpieces up to 2" thick.

Time to get started

1 Cut a piece of ¾" plywood to the size shown on **Drawing 2**, and then cut a piece of ¼" hardboard to the same dimensions for the base.

2 Cut ⅝" dadoes 3/16" deep in one face of the plywood where dimensioned. Glue the hardboard to the dadoed face with yellow glue. Now, clamp the assembly between two scraps of plywood to ensure even pressure. After the glue dries, remove the clamps, set your dado blade for a ¼"-wide cut, put an auxiliary fence on your miter gauge, and cut a slot through the hardboard centered over each plywood dado, as shown in **Photo D**.

3 Cut a piece of maple to ¼×⅜×12", then cut two 3" pieces and one 3½" piece from this blank for the guide bars. For the hold-down bases, cut a piece of ¾" plywood to 1½×12". Cut a ¼" groove down the center of one face of this plywood, where dimensioned on the drawing. Drill two ¼" holes near opposite ends of the groove, with each hole centered in the groove and ½" from the end. Cut a 3" piece from each end to make two hold-down bases. Next, glue one guide bar piece in the groove on each hold-down base. After the glue dries, drill a ¼" hole through each assembly, using the previously drilled holes as guides.

4 Cut a maple blank to ¾×2×12" to make the pivot block. (We begin with an oversized piece to assure safety during the cutting process.) Cut a rabbet on one end of the blank where shown on **Drawing 2a**. Now, drill two holes to form the ends of the adjustment slot, remove the material between the holes with a coping saw or scrollsaw, and clean up the slot with a file. Cut a ¼" groove centered on the bottom edge of the blank. Next, drill a ¼" hole centered in the groove 2½" from the rabbeted end. Glue in the 3½" guide bar piece, making it flush with the rabbeted end. After the glue dries, drill a ¼" hole through the blank, using the previously drilled hole as a guide. Trim the blank to 3½" in length. Sand and finish the assembly.

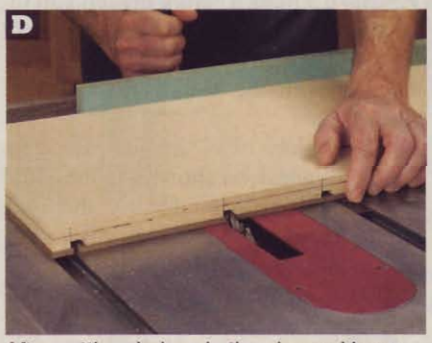

After cutting dadoes in the plywood base, glue the hardboard to the dadoed face. Mount the two outside blades of a dado set in your tablesaw, and cut slots through the hardboard centered over each dado.

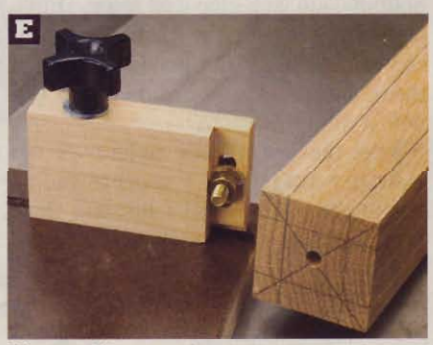

Diagonal lines on the end of the workpiece locate the hole that fits onto the indexing pin. Draw the cutline for the final shape, and extend the lines to the edges to help you position the workpiece on the jig.

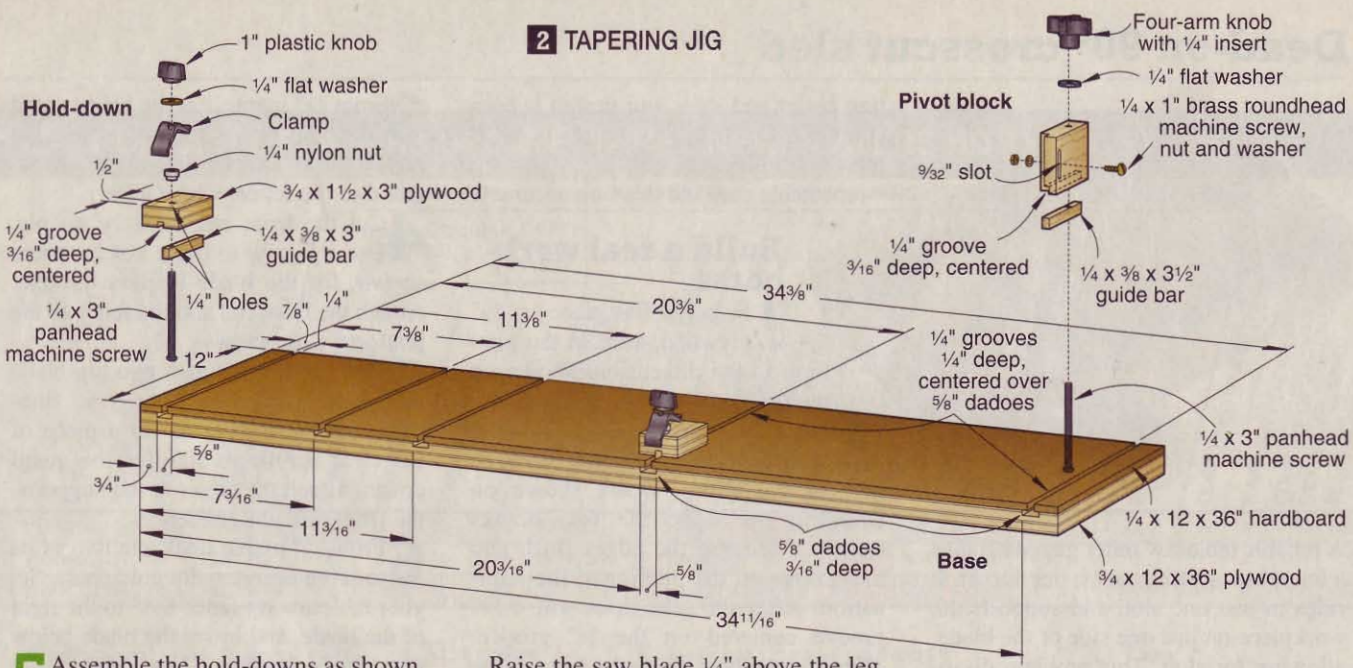

5 Assemble the hold-downs as shown. For the pivot block, file or grind one edge of the washer flat as shown on **Drawing 2a**, and then assemble the nut, screw, and washer as shown. Adjustable up or down in the slot, this screw serves as an indexing pin. Once set for a particular workpiece, it guarantees that every cut in the sequence is an equal distance from the center of the workpiece.

Tap into tapering

To taper a leg, cut your workpiece to finished length, and then rip it to the square dimensions that you want for the untapered section at the upper end. Draw a line on all four faces to mark where the taper will begin. Drill a ¼" centering hole ⅜" deep at the center of the bottom end, and add cut lines to show the final dimensions of that end, as shown in **Photo E**. Draw cut lines on the face connecting the leg-bottom marks with the taper-start marks, as shown in the photo, both to visualize the final shape, and to serve as a safety reminder as you push the jig across the saw.

Mount the leg centering hole on the indexing pin. Slide the pivot block until the planned outside face of the leg aligns with the edge of the jig. Turn the knob to lock the pivot block in place. Now, near the upper end of the leg, align the taper-start cutline with the edge of the jig. Slide the hold-down blocks against the leg, and tighten the nylon nut on each one to set the block's position. Tighten the top knob on each hold-down to clamp the leg in place.

Raise the saw blade ¼" above the leg. Butt the jig to the fence, move the fence until the saw blade just clears the left side of the jig, and then make the cut, as shown in **Photo F**. To make each of the three remaining cuts, loosen the hold-down knobs, rotate the leg one-quarter turn clockwise (as viewed from the pivoting end), reclamp, and cut.

This jig also serves another purpose, as shown in **Photo G**. When you need to cut a single taper, mark its start and stop points on the end and edge of your workpiece. Remove the indexing pin from the end block, and nest the end of the workpiece in the notch. Align the marks with the edge of the jig, and clamp. Place your hold-downs against the workpiece. Tighten the pivot block in place, and make the cut.

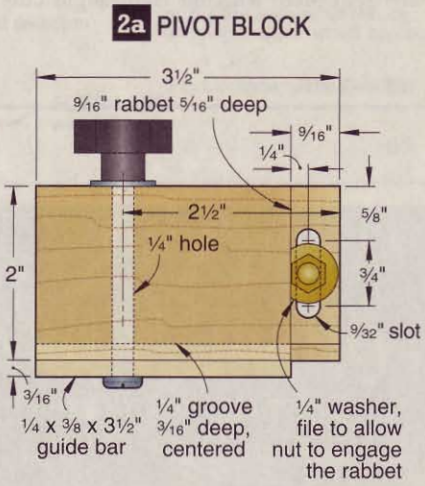

Hold the taper jig tightly against the tablesaw rip fence as you cut. Before starting each pass, make certain that your left hand is well away from the line.

The width and adjustability of the taper jig allow you to handle a wide range of angle cuts. Here, with the jig flipped end-for-end, we're shaping a simple leg.

Dead-on 90° crosscut sled

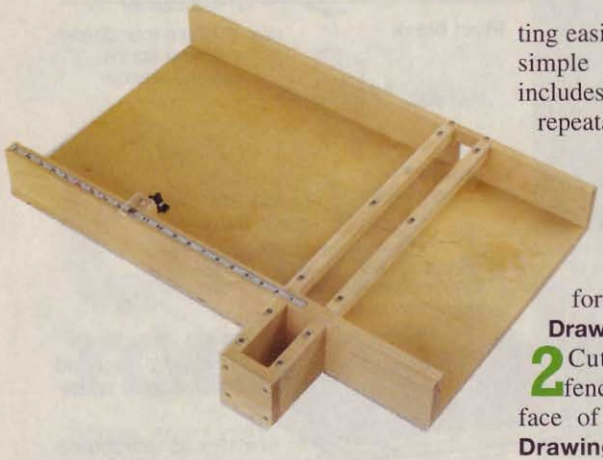

A reliable tablesaw miter gauge handles a lot of crosscutting tasks, but not all. It rides in just one slot, and supports the workpiece on just one side of the blade, allowing for slop. This problem disappears, however, with a well-made crosscut sled. Making right-angle cutting easier and safer, our design is both simple and cheap to build. And it includes adjustable, reliable stops for repeatable cuts and dead-on accuracy.

Build a real workhorse

1 Select a flat piece of ¾" plywood, and cut the platform to the dimensions shown on **Drawing 3**.

2 Cut two maple pieces for the fence, and cut a ⅝" groove in the face of one piece, where shown on **Drawing 3a**. Glue the two blanks together, keeping the edges flush and the groove on the interior of the lamination. After the glue dries, cut a ¼" groove centered on the ⅝" groove. Then, cut a rabbet along the front of the bottom edge and a ½" groove centered along the top edge.

3 From ¾" maple, cut the blade guard sides and end. Glue and screw the end to the sides. Now, screw the blade guard to the fence, where shown.

4 Cut the front rail from ¾" maple. Use a jigsaw to cut a notch, where shown, for the blade to pass through. Attach the front rail and the fence to the platform with screws.

5 Cut, sand, and finish two top blade guard supports. Using a fine-toothed tablesaw blade, cut a piece of ¼" clear acrylic to size for the guard cover. Attach the cover to the supports, the front rail, and the fence.

6 From ¾" maple stock, cut two strips to serve as miter-slot guide bars. Set your tablesaw rip fence 8⅛" to the right of the blade, and lower the blade below the table's surface. (Note: Make sure your fence is parallel to the miter gauge slot before proceeding.) Apply double-

3 CROSSCUTTING SLED

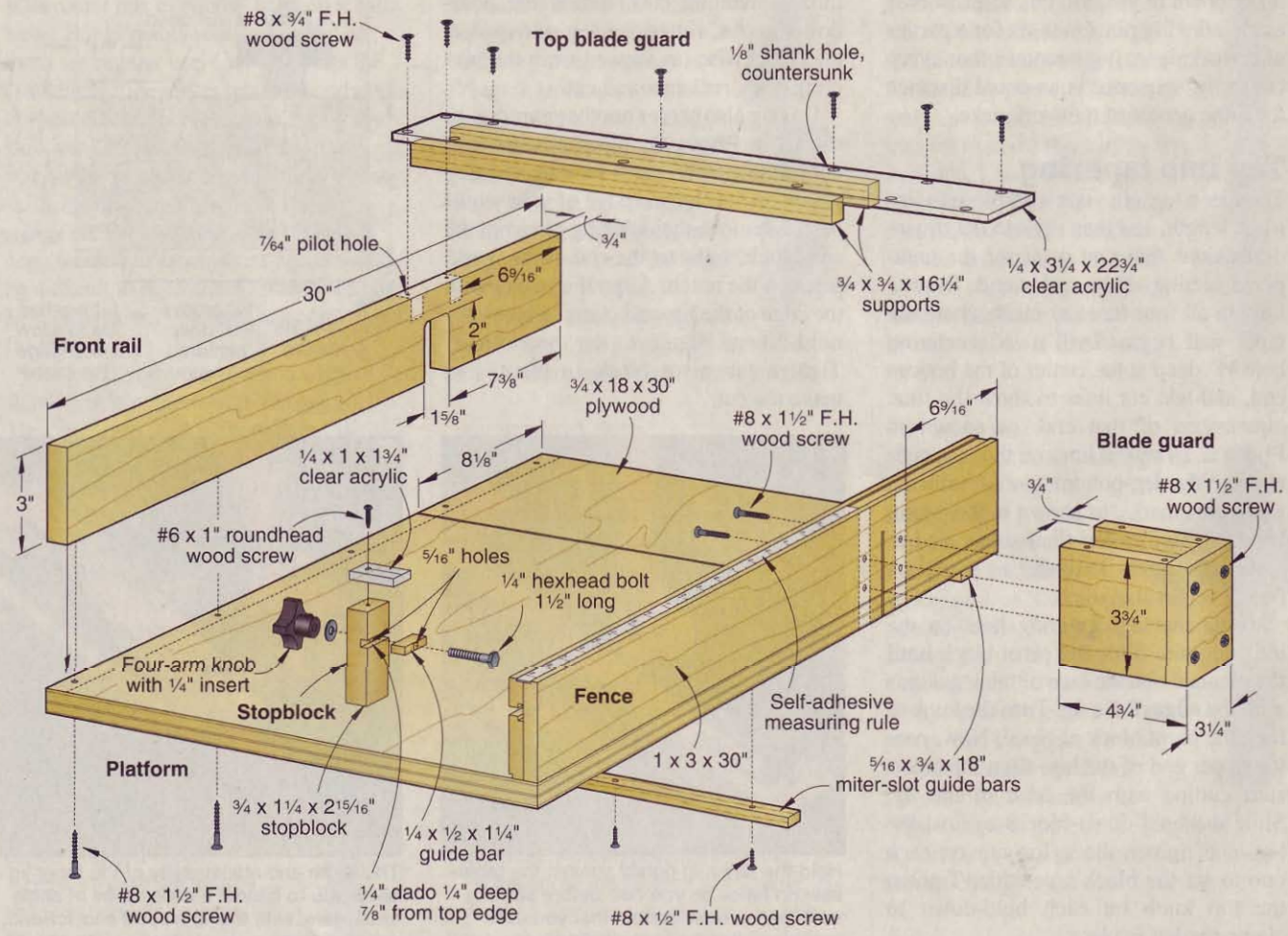

faced tape to the top of each guide bar, and attach the bars to the platform, as shown in **Photos H** and **I**. Remove the assembly from the saw, and permanently attach the bars with screws.

7 Cut a piece for the stopblock, and cut a dado in the back, where shown. Cut a guide bar, and glue it into the dado. Drill a shank hole through the block and bar, where shown. Now, cut a piece of ¼" acrylic plastic to size for the stopblock indicator. See **Drawing 3b**. Drill, saw, and file smooth the slot, where shown. Make a cursor line, as shown in **Photo A**.

8 Remove the top blade guard, sand the jig, and apply three coats of finish. Reattach the blade guard, assemble and install the stopblock, place the crosscut sled on your tablesaw, and make a cut from the front edge through the fence. Use a rule to set the stopblock 4" from the kerf. Mark the center of the stop block on its top end, align the 4" line on the self-adhesive measuring tape with that mark, and attach the tape in the fence groove. Use tin snips to cut off the portion of the tape extending beyond the left end of the fence. Place the indicator on the stopblock, align the cursor with the tape's 4" line, and attach the indicator to the block with a screw.

Now, let's go sledding

If a workpiece fits between the fence and the front rail, you can cut it on your crosscut sled, as shown in **Photo J**. Use the stop block to cut multiple pieces to the same length, provided that length falls within the stop block's range. Remove the stopblock when cutting pieces that extend beyond that range. When you install a tablesaw blade of a different thickness or with a different tooth set than the one used to calibrate your stopblock, check the setting with a rule, and adjust the cursor.

Buying Guide

Hardware. Stainless steel rules no. 06K20.06, $1.40 each; 1½" four-arm plastic knob no. 00M55.30, $1.30 each. Call Lee Valley at 800/871-8158, or go to www.leevalley.com.

Hold-down with bolt and knob, no. 142398, $4.99 each; self-adhesive rule, no. 08Y42, $9.99. Call Woodcraft at 800/225-1153, or go to www.woodcraft.com.

Written by **Jim Pollock** with **Jeff Mertz** and **Kevin Boyle**
Illustrations: **Roxanne LeMoine**

3a FENCE SECTION VIEW

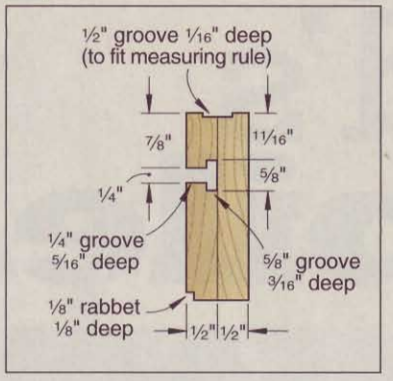

3b INDICATOR DETAIL

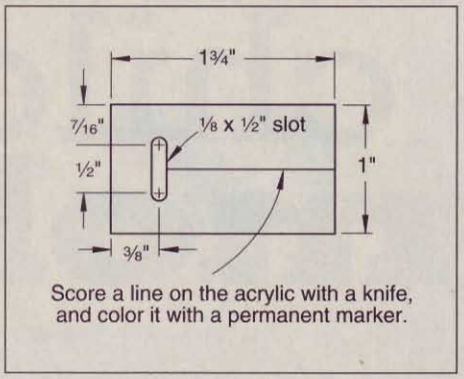

Score a line on the acrylic with a knife, and color it with a permanent marker.

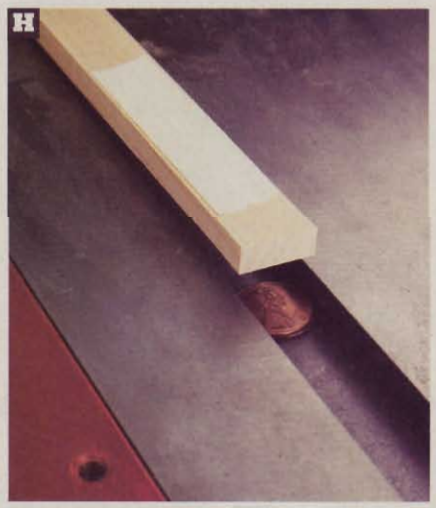

Two pennies shim the miter-slot guide bars slightly above the tablesaw surface. Place a couple of these stacks in each miter-gauge slot, and set the bars on top.

Keeping the right end of the platform against the rip fence, set the sled assembly on the guides. Press down firmly to stick the bars to the platform.

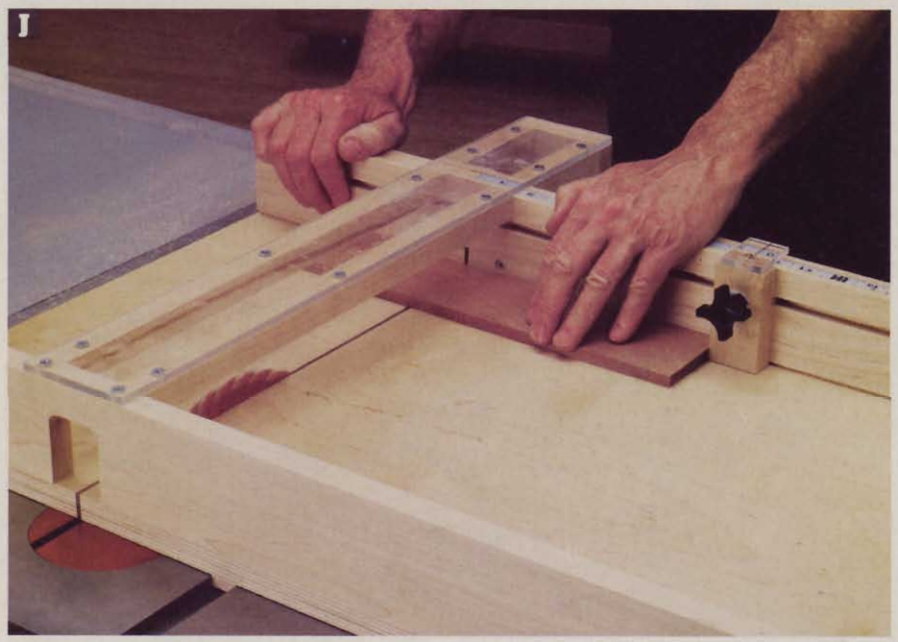

Hold the workpiece firmly against the fence as you make a cut. Keep your hands outside the blade guard, and don't cut through its end.

out-of-this-world child's mobile

Children will have heavenly dreams when they fall asleep mesmerized by this mobile's colorful celestial bodies and spaceship. All you need to make it is a scrollsaw, a small amount of wood, fishing line, and food coloring.

Cut and color the parts

1 Cut two 4×24" pieces from ¼"-thick maple. Make two copies of the child's mobile patterns on the *WOOD PATTERNS®* insert. Cut out the patterns, and spray-adhere them to the maple workpieces. For the top arm, join the pattern halves where shown.

2 Scrollsaw the parts to shape, cutting down the center of the pattern lines using a no. 5 crown-tooth blade. To start the inside cuts, drill 1/16" holes where marked.

3 Now, drill 3/32" holes where shown. Next, with the parts clamped in a vertical position on your drill press, drill 1/16" holes 1/8" deep, centered on their edges, into the 3/32" holes. Also, drill 1/16" holes, centered, through the three arms.

4 Remove the patterns using a cloth moistened with a solvent. Sand the parts smooth with 220-grit sandpaper.

5 Clamp a 1"-diameter wood ball on your drill-press table. Find wood balls at craft supply stores, or order from Meisel Hardware Specialties (800/441-9870, or go to www.meiselwoodhobby.com). Drill a 1/16" hole through the center of the ball.

6 Color the parts if you wish. We used red, green, blue, and yellow food coloring, mixing two teaspoons of each color with one-quarter cup of water. Dip the parts in the dyes for 5 seconds to color them. Then, wipe them off, and let them dry overnight. Apply two coats of a clear finish. We used DEFT semigloss aerosol lacquer. As an alternative to food coloring, you can use bright-colored, transparent stains, available in a set. For more on this, see the article on *page 14*.

String the mobile's parts together

1 From 15-pound monofilament fishing line, cut six 8"-long pieces for attaching the moon, Saturn, and shooting-star figures to the ends of the arms, where shown on **Drawing 1**. Tie and draw together three overhand knots on one end of each line as shown on

1a OVERHAND KNOT DETAIL

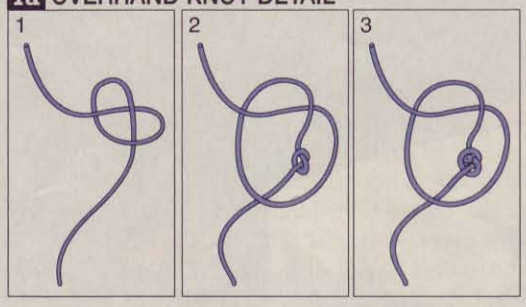

1 CHILD'S MOBILE

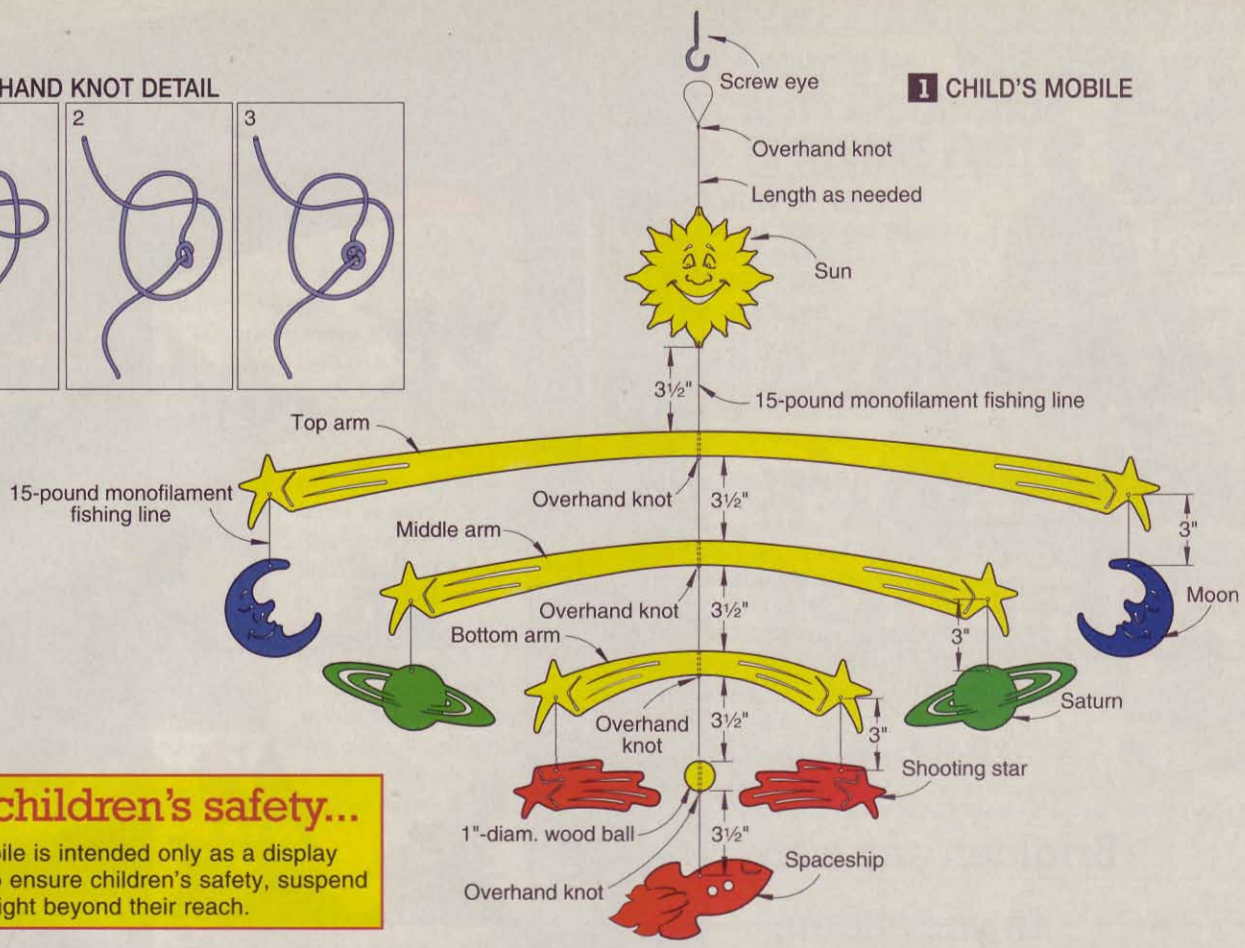

For children's safety...

This mobile is intended only as a display piece. To ensure children's safety, suspend it at a height beyond their reach.

A

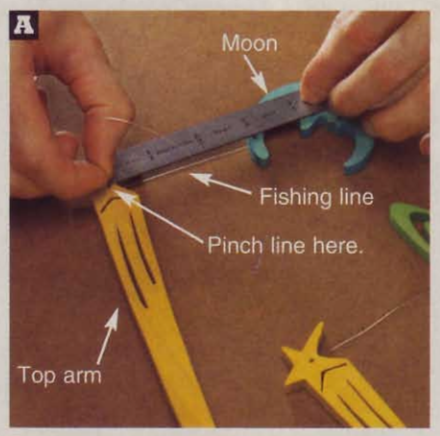

Position the figure and arm so their 3/32" holes are 3" apart. Pull the line taut, and pinch it where it exits the arm's hole.

SHOP TIP

Another use for forceps

Tying knots in this project's fishing line while holding the line taut can be cumbersome, especially if you have stubby or arthritic fingers. Here's an easy way to do it without tying yourself in a knot. With the line positioned where needed, pinch it with serrated (locking) forceps, freeing your hands to tie the knot. Small forceps, having 3½–6¼" lengths, sell for under $4. Order from AllHeart.com, 431 Calle San Pablo, Camarillo, CA 93012, or go to www.allheart.com.

Drawing 1a. Trim the lines just below the knots. Then, apply a drop of cyanoacrylate glue to the knots to prevent them from loosening.

2 Thread the lines through the 3/32" hole and out through the 1/16" hole in each of the six figures. Pull the lines to draw the knots into the center of the 3/32" holes.

3 Attach the figures to the three arms by threading their lines through the arms' 1/16" and 3/32" holes. To keep the mobile symmetrical, position each figure as shown in **Photo A**. Then, knot the line as before. For an easy way to hold the line's position for knotting, see the **Shop Tip**, *above*. Trim the lines, and glue the knots. When the glue cures, draw the knots into the arms' holes.

4 Cut a 4'-long piece of line, and knot and glue one end. Thread the line through the spaceship's 3/32" and 1/16" holes. Knot and glue the line 3½" above the spaceship. Thread the line through the wood ball so it sits on the knot. Repeat the process to attach the bottom, middle, and top arms and the sun, spacing each 3½" apart.

5 To hang the mobile, cut another piece of line to the needed length. Attach one end to the sun's top hole, and form a loop at the other end. Now, hang the mobile on a screw eye, and enjoy your view of the universe.

Written by **Owen Duvall**
Project design: **Mike Mittermeier**

high-class collector's cabinet

Brighten any wall in your home, as well as your favorite small treasures, with this mirror-backed lighted display project.

A drop-down panel, masquerading as three small drawers, conceals a handy storage compartment.

Give your favorite collectibles maximum visibility while keeping them safely behind glass. Made of dark-stained cherry, this design features easy-to-make built-up crown and base moldings, a mirrored back, built-in lighting, and onboard storage behind a drop-down "drawer" panel. And when you're ready to hang your cabinet, interlocking cabinet and wall cleats make dead-level, rock-solid mounting a snap.

For the board feet of lumber and other items needed to build this project, see *page 92*.

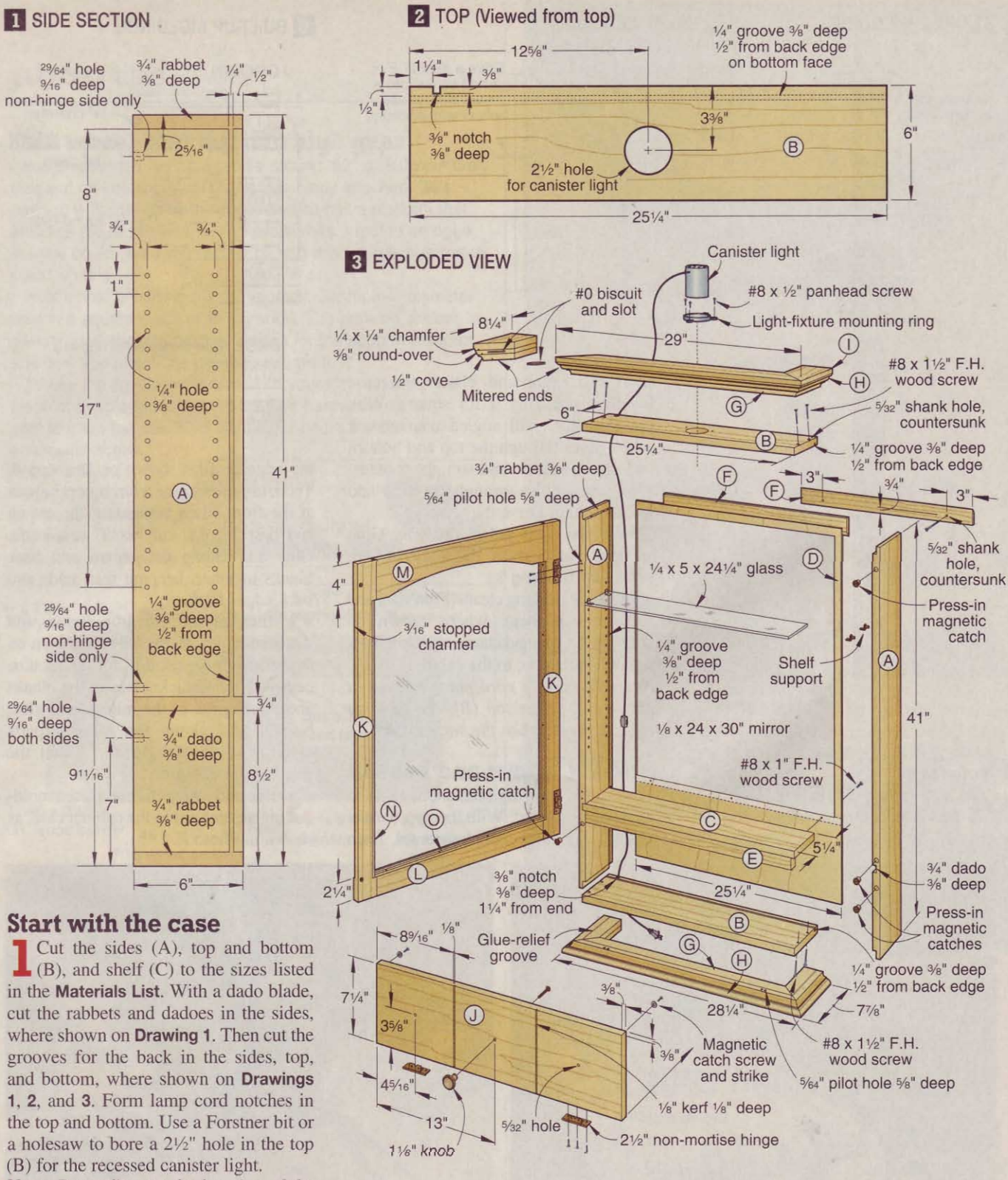

Start with the case

1 Cut the sides (A), top and bottom (B), and shelf (C) to the sizes listed in the **Materials List**. With a dado blade, cut the rabbets and dadoes in the sides, where shown on **Drawing 1**. Then cut the grooves for the back in the sides, top, and bottom, where shown on **Drawings 1**, **2**, and **3**. Form lamp cord notches in the top and bottom. Use a Forstner bit or a holesaw to bore a 2½" hole in the top (B) for the recessed canister light.

Note: *Depending on the location of the nearest electrical outlet, you may wish to cut the cord notches near the opposite ends of the top and bottom. Also, the hole in the top (B) is for the self-ventilating light fixture listed in the* **Buying Guide**. *If you use a different fixture, check its hole size, and whether you have to vent the cabinet to avoid heat buildup.*

2 With a 29/64" bit in your drill press, drill holes for the press-in magnetic catches in the sides' front edges, where dimensioned on **Drawing 1**. There are three catches in the right-hand side and one in the left-hand side.

3 Attach a stop collar to your drill bit, and drill the shelf-support holes in the sides (A). To do this quickly and accurately, make the drilling guide shown on **Drawing 4**. Mark the guide's top, where shown. Align the top of the guide with the top rabbets' shoulder. When drilling the front rows of holes, align the guide's edge with the sides' front edges. For the rear rows, align the

4 DRILLING GUIDE

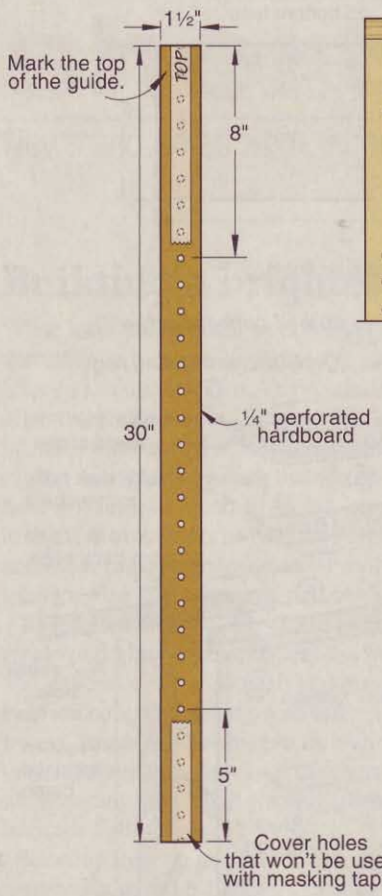

5 HANGING CLEATS

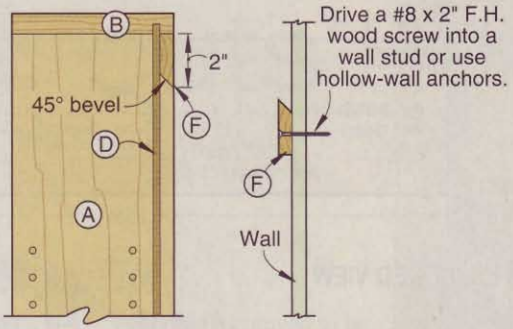

6 BUILT-UP MOLDINGS

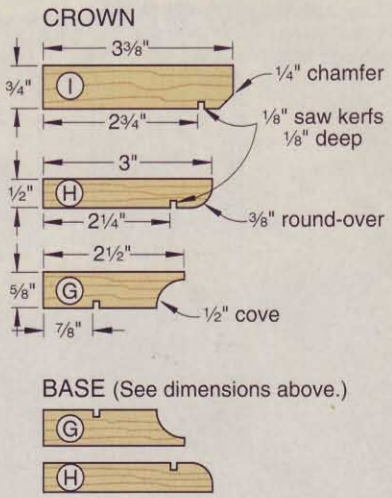

guide with the front edge of the groove for the back.

4 Cut the back (D) to size. Capturing the back in the grooves in the top, bottom, and sides, and inserting the shelf (C), glue and clamp the case together, checking it for square. With the glue dry, drill angled countersunk screw holes through the top and bottom and into the sides, and straight countersunk screw holes through the back and into the shelf. Drive the screws.

5 Cut the shelf rail (E) to size. Glue and clamp it to the shelf, where shown on **Drawing 3**.

6 Cut the hanging cleats (F) to size, and bevel-rip them, where shown on **Drawing 5**. Glue and clamp one cleat, centered side-to-side, to the cabinet's back. ***Note:*** *To clear a cord notch located at either end of the top (B), the hanging cleat is shorter than the back's width.*

Add the crown and base

1 Cut the molding blanks (G, H, I) to the sizes listed. With the appropriate bits in your table-mounted router, form the edge profiles shown on **Drawing 6**. Then, to prevent glue from squeezing out at the front when laminating the crown and base blanks, cut ⅛×⅛" saw kerfs. Glue and clamp the crown and base blanks together, keeping their ends and back edges flush.

2 Miter-cut the glued-up crown and base blanks to the lengths shown on **Drawing 3**. Now cut slots for #0 biscuits, centered in the thicknesses of the blanks and the lengths of the miters, and glue, biscuit, and clamp the mitered parts together. With the glue dry, sand the moldings to 220 grit.

3 Glue and clamp the completed molding assemblies to the cabinet case, as shown in **Photo A**.

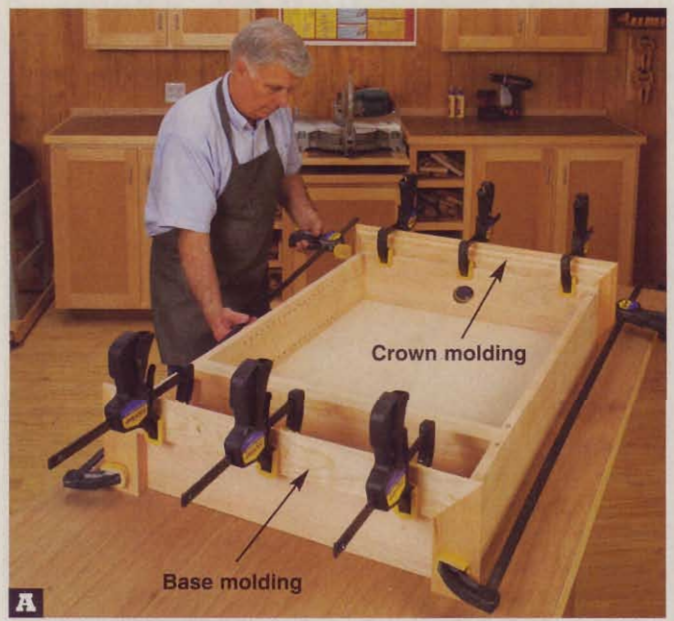

Glue and clamp the crown molding assembly (G/H/I) and base molding assembly (G/H) to the case, centered side-to-side and flush with the case's back.

When routing away the groove's inside lip, cut a ¼×¼" spacer to friction-fit between the stiles (K). The bit's pilot bearing contacts the spacer, stopping the bit before it cuts into the upper rail (M).

7 PANEL HINGE LOCATION
(Top section view)

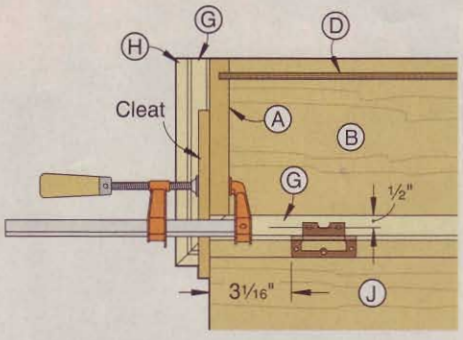

Add a hinged panel

1 Cut the drawer panel (J) to size. Then make the two saw kerfs and drill the knob holes, where shown on **Drawing 3**.

2 With their knuckles against the front of the panel (J), position the hinges' large leaves on the bottom edge of the panel, where shown on **Drawing 7**. Drill 5/64" pilot holes, and drive the supplied screws. Then draw lines on the cove molding (G) ½" away from and parallel to the front edge of the bottom (B), where shown. Clamp scrap cleats to the sides (A) to keep the panel's ends flush with the sides. Now, with the panel captured between the cleats, align the holes in the hinges' small leaves with the marked lines on the cove molding (G), drill pilot holes, and drive the screws.

Now build the door

1 Cut the stiles (K), lower rail (L), and upper rail (M) to the sizes listed. With a dado blade, cut the centered ¼" grooves ¼" deep in the stiles and lower rail, where shown on **Drawing 8**. Then raise the blade and cut the 1½"-deep groove in the upper rail.

2 To form the mortises centered in the stiles' grooves, chuck a ¼" brad-point bit in your drill press and drill overlapping holes, where shown on **Drawing 9**. Then clean up the mortises' sides and square the ends with a chisel.

3 With a dado blade in your tablesaw, and an auxiliary extension attached to your miter gauge, cut the tenons shown on **Drawing 9** on the rails (L, M). Form the tenons' faces first, and then turn the rails on edge and cut the haunches. For consistent cuts, clamp a stopblock to the auxiliary extension.

4 Mark the ends and center of the arch on the upper rail (M). Bend a fairing stick to connect the points, and draw the curve. Bandsaw and sand the arch.

8 DOOR (Viewed from back)

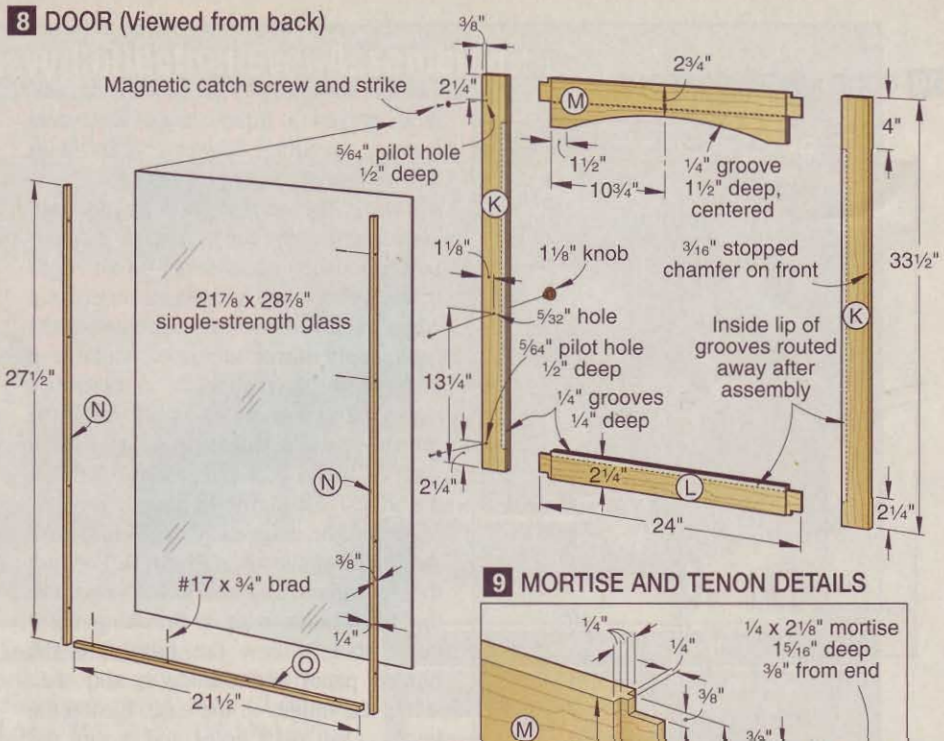

9 MORTISE AND TENON DETAILS

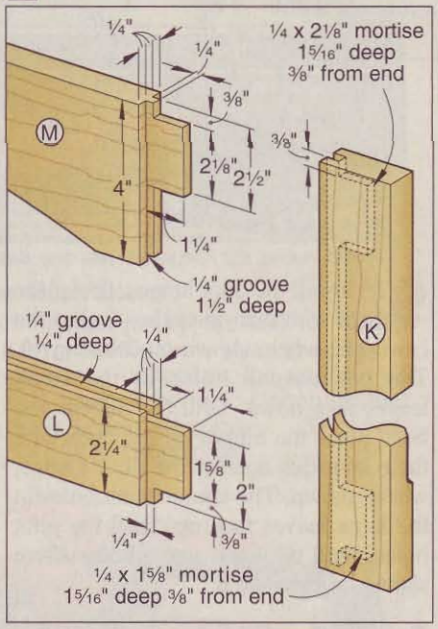

5 Glue and clamp the door, checking for square. With the glue dry, sand the joints smooth.

6 Create a rabbet on the door to accept the glass by chucking a ¼" rabbeting bit in your handheld router, and routing away the ¼" groove's inside lip on the stiles (K) and lower rail (L). To avoid routing into the upper rail (M), insert a spacer, as shown in **Photo B**. Avoid chip-out by removing the lip in several shallow passes, or by climb-cutting. Square the rabbet's corners with a chisel.

7 To rout the stopped chamfers on the door's outside face, cut a pair of ½×¾" stopblocks, one 4⅛" long for the top and one 2⅜" long for the bottom. Clamp them to the door's edge, flush at the top and bottom, and rout the chamfers, as shown in **Photo C**. Repeat on the door's other edge.

8 Cut and fit the vertical stops (N) and horizontal stop (O). Cut the head off a #17×¾" brad, and use it to drill pilot holes in the stops, where shown on **Drawing 8**.

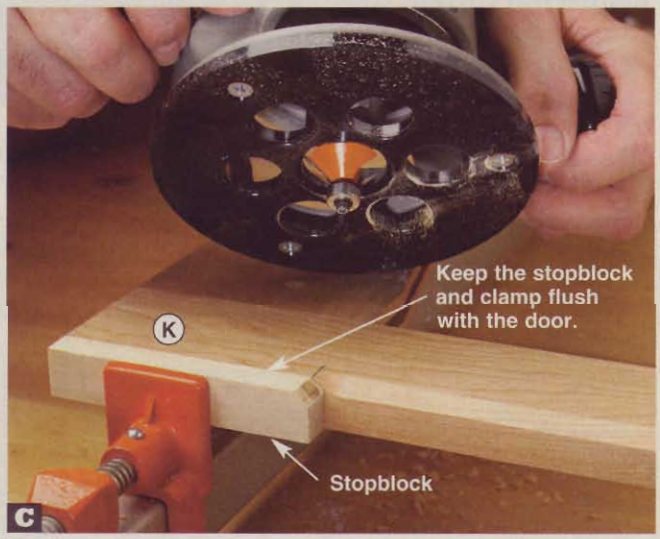

½×¾" stopblocks clamped to the door's edges stop the chamfer bit's pilot bearing, and also prevent chip-out. The 4⅛"-long top stopblock is shown here.

10 DOOR HINGE LOCATIONS

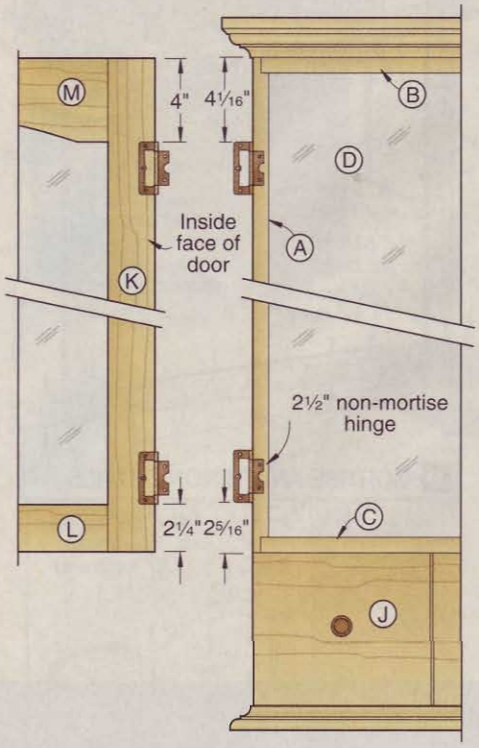

9 To install the door hinges, first place them with their knuckles against the case side, where shown on **Drawing 10**. The countersunk holes in the small leaves face down. Drill the pilot holes. Now place the hinges on the door with their knuckles against the door's edge, where shown. The countersunk holes in the large leaves face up. Drill the pilot holes. Drill the knob screw hole, where shown on **Drawing 8**.

Apply the finish, and install the hardware

1 Remove the drawer panel's hinges, and sand all the parts to 220 grit. Apply the finish. (We applied ZAR no. 118 Dark Mahogany oil-based stain, and then sprayed on three coats of Deft satin lacquer, sanding between coats with 320-grit sandpaper.)

2 Have the mirror, door glass, and glass shelves cut to size. (We specified a polished pencil edge on all edges of the shelves, and had the mirror's sharp edges removed.) Lay the cabinet on its back, apply mirror adhesive (available at your local glass shop or at hardware stores and home centers), and install the mirror. Push the mirror snug against the shelf (C), and center it side-to-side. Let the adhesive cure for 48 hours.

3 Press the magnetic catches into their holes, as shown in **Photo D**. Position the door glass, and nail in the stops. Fill the brad holes with a matching color putty stick. Screw the hinges to the hinged panel and the door, and then screw the hinges to the case. Fasten the knobs. Drill pilot holes and mount the magnetic catch strike plates. (The flathead screws provided did not sit flush with the strikes' surfaces, so we had to deepen their countersinks.)

4 Drill pilot holes, and screw the canister light's mounting ring to the top of the top (B). Slide the canister into the ring so its top is even with the top of the crown, and tighten the clamping screw.

5 Drill countersunk holes through the wall hanging cleat. Making sure it is level, fasten the cleat to the wall, either screwing into wall framing or using hollow wall anchors. Hang the cabinet, interlocking its cleat with the one on the wall, and placing the cord in the top and bottom notches. Install the shelf supports and shelves. Arrange your items, close the door, switch on the light, step back, and admire your collection and your craftsmanship.

Cutting Diagram

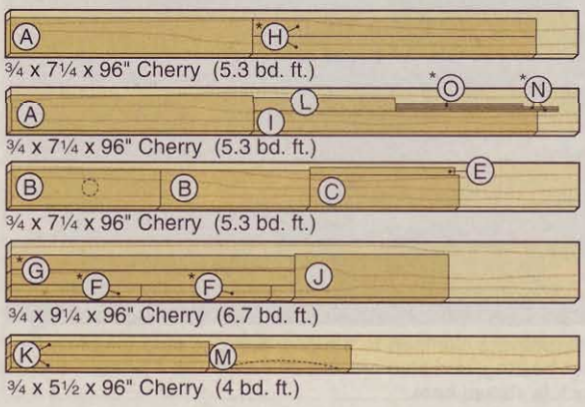

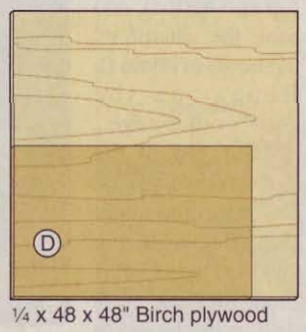

¼ x 48 x 48" Birch plywood

*Plane or resaw to the thicknesses listed in the Materials List.

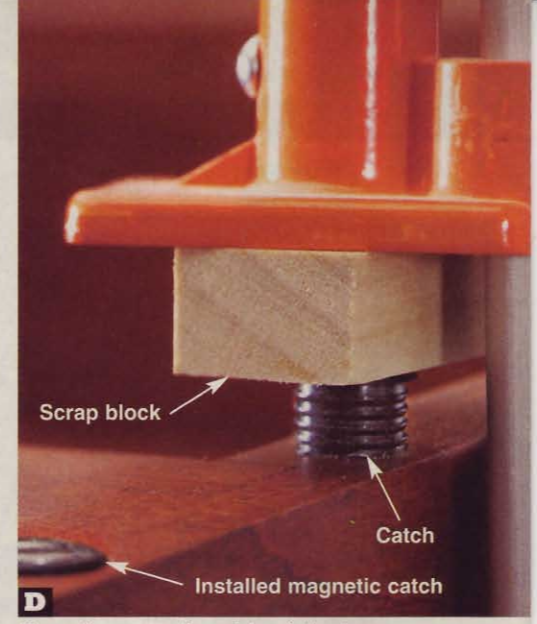

Press the magnetic catches into place using a clamp. Insert a small block of wood between the catch and the clamp's jaw to protect the catch and the case's finish.

Written by **Jan Svec**
Project design: **Jeff Mertz**
Illustrations: **Roxanne LeMoine**

Materials List

Case	FINISHED SIZE T	W	L	Matl.	Qty.
A sides	¾"	6"	41"	C	2
B top and bottom	¾"	6"	25¼"	C	2
C shelf	¾"	5¼"	25¼"	C	1
D back	¼"	25¼"	40¼"	BP	1
E shelf rail	¾"	1¼"	24½"	C	1
F hanging cleats	½"	2"	21½"	C	2
Molding					
G cove blanks	⅝"	2½"	48"	C	2
H round-over blanks	½"	3"	48"	C	2
I bevel blank	¾"	3⅜"	48"	C	1
Panel and door					
J drawer panel	¾"	7¼"	26"	C	1
K stiles	¾"	2¼"	33½"	C	2
L lower rail	¾"	2¼"	24"	C	1
M upper rail	¾"	4"	24"	C	1
N vertical stops	¼"	⅜"	27½"	C	2
O horizontal stop	¼"	⅜"	21½"	C	1

Materials key: C–cherry, BP–birch plywood.

Supplies: #8x1" and #8x1½" flathead wood screws, #0 biscuits, #17x¾" brads, ⅛x24x30" mirror, 21⅞x28⅞" single-strength glass, ¼x5x24¼" glass shelves (3), mirror adhesive, #8x2" flathead wood screws or hollow wall anchors to fasten the hanging cleat to the wall.

Blades and bits: Stack dado set; ½" cove, ⅜" round-over, ¼" rabbeting, and chamfer router bits.

Buying Guide

Hardware. Statuary bronze 2½" non-mortise hinges no. SYH266 2.5, $0.72 ea. (4); press-in magnetic catches with strikes no. SYMGEMO IS4S, $0.95 ea. (4); 1⅛" pewter-finish brass knobs no. A02370 PWT, $4.51 ea. (4); shelf supports no. G708WPB, $0.22 ea. (12); recessed canister light fixture no. SLMC25 BLK, $8.45. Woodworker's Hardware. Call 800/383-0130, or go to www.wwhardware.com.

temps in a tube

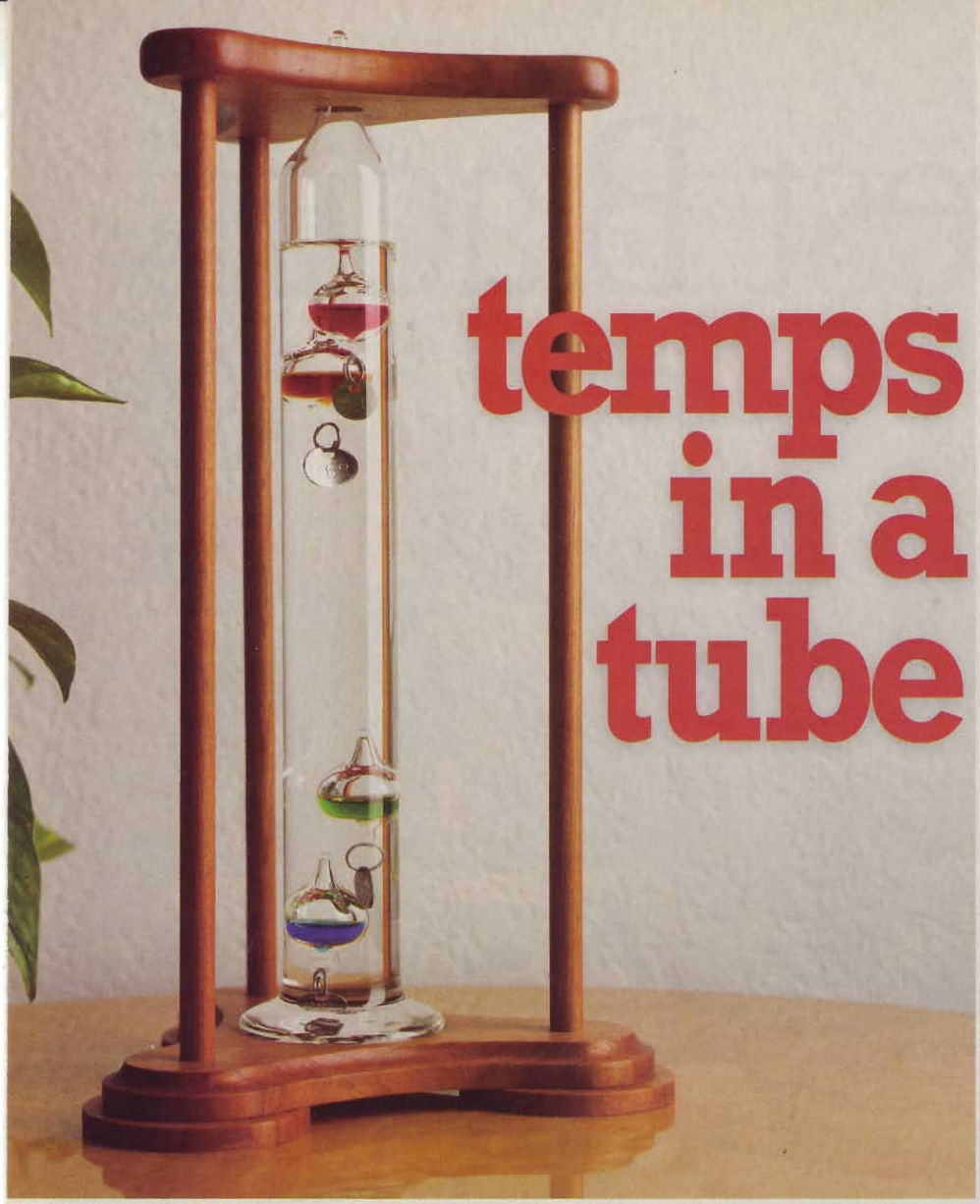

Build this simple, eye-catching stand for a "Galileo" thermometer, and then watch as others warm up to it with curiosity and pure delight.

Make a beautiful stand

1 From ½"-thick cherry, cut the top and base blanks (A, B) to the sizes listed in the **Materials List**.

2 Copy the top and base patterns on the *WOOD Patterns*® insert, and attach them to the blanks using spray adhesive. Now, drill ⅜" holes in the top and base, where located on the patterns. Using a countersink bit, chamfer the top and bottom edges of the center hole in the top. Bore a 2⅜" hole ¼" deep in the base using a Forstner bit.

3 Scrollsaw or bandsaw the top and base to shape, as shown in **Photo A**. Sand the parts' edges smooth with 220-grit sandpaper.

4 As illustrated on **Drawing 1a**, rout a ¼" partial round-over along the top's edges, where shown on **Drawing 1**. Now, change your router setup to the one shown on **Drawing 1b**, and rout a ¼" partial cove along the base's top edge. Remove the patterns from the pieces. (A cloth moistened with a solvent works well for this.) Sand the parts smooth.

5 From ¼"-thick stock, cut a 3×10" piece for forming the feet (C). Draw three 2½"-diameter circles for the feet on the workpiece spaced about ½" apart. Drill a counterbore centered in each circle, as shown in **Photo B**. Next, drill a 7/64" shank hole centered inside the counterbores. Then, countersink the holes on the workpiece's bottom face. Scrollsaw the feet to shape, and sand their edges smooth.

6 From a ⅜" cherry dowel 36" long, cut three pillars (D) to 11½" long.

7 Sand the parts smooth. Glue the pillars (D) into the holes in the top (A).

8 To position the feet (C) on the base (B), cut three 1½"-long pieces from a ⅜" dowel. Insert the dowels in the holes in the base so they project ⅛" from the base's bottom. Now, apply glue to the top of the feet. Assemble and clamp the feet to the base with the dowels centered in their counterbores and the feet's grain aligned with the base's grain. Then, remove the dowels.

Apply finish, and add the thermometer

1 Stain the parts if you wish. (We used ZAR Oil-Based Stain no. 116 Cherry.) Apply two coats of a protective finish. (We used DEFT Satin Clear Wood Finish.)

2 Place the thermometer in the base. Align the top's and base's grain. Then, install the top/pillar assembly (A/D) on the base with the thermometer's tip captured in the top's centered hole, seating the pillars fully into the base's holes. Next, place the assembly on its side. Using the shank holes in the feet as guides, drill 5/64" pilot holes in the pillars. Drive the screws. Finally, place this colorful instrument on a table, and watch it go to work.

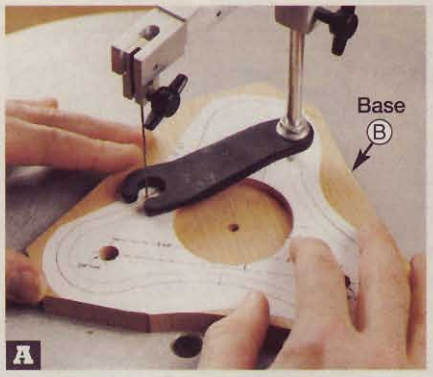

Cut out the top (A) and base (B) by scrollsawing outside the pattern line, and then sanding to the line.

Using a ⅜" Forstner bit, drill a ⅛"-deep counterbore in the center of each foot (C) on the workpiece.

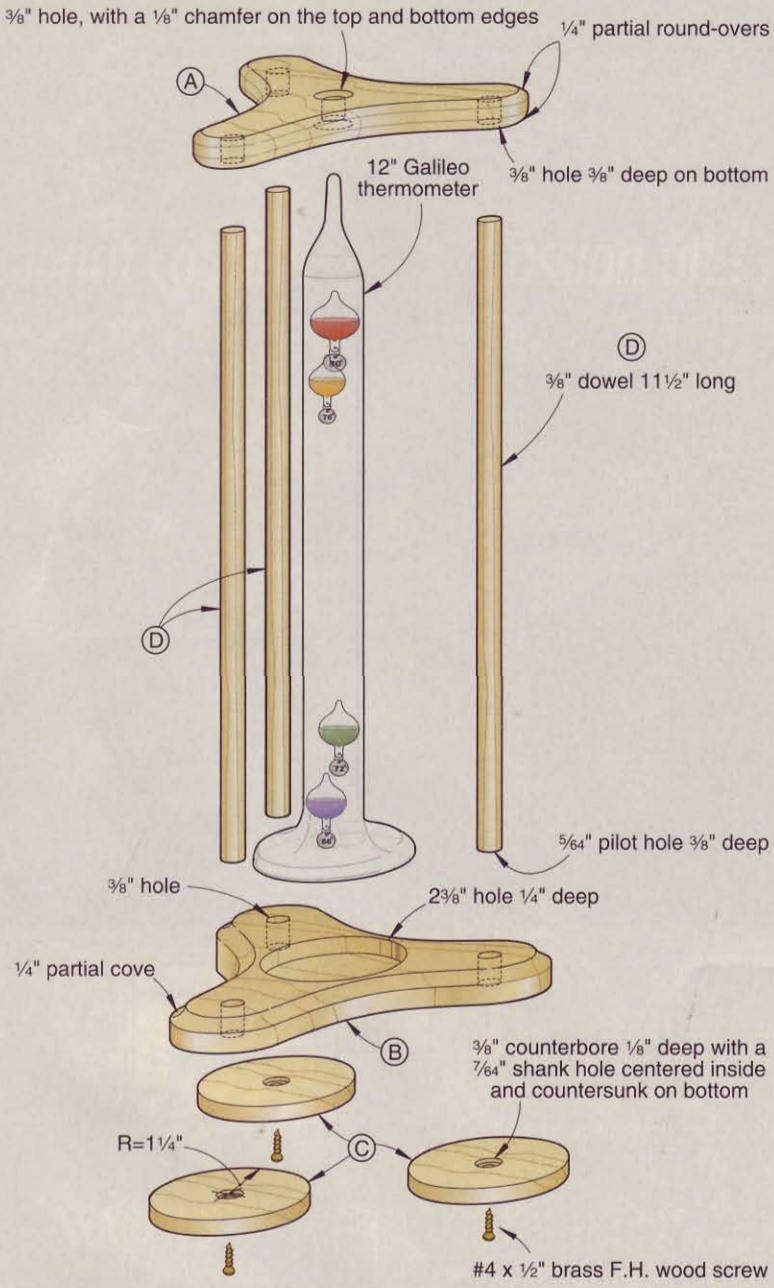
⅜" hole, with a ⅛" chamfer on the top and bottom edges
¼" partial round-overs
A
12" Galileo thermometer
⅜" hole ⅜" deep on bottom
D
⅜" dowel 11½" long
D
5/64" pilot hole ⅜" deep
⅜" hole
2⅜" hole ¼" deep
¼" partial cove
B
⅜" counterbore ⅛" deep with a 7/64" shank hole centered inside and countersunk on bottom
R=1¼"
C
#4 x ½" brass F.H. wood screw

1 EXPLODED VIEW

How does a Galileo thermometer work?

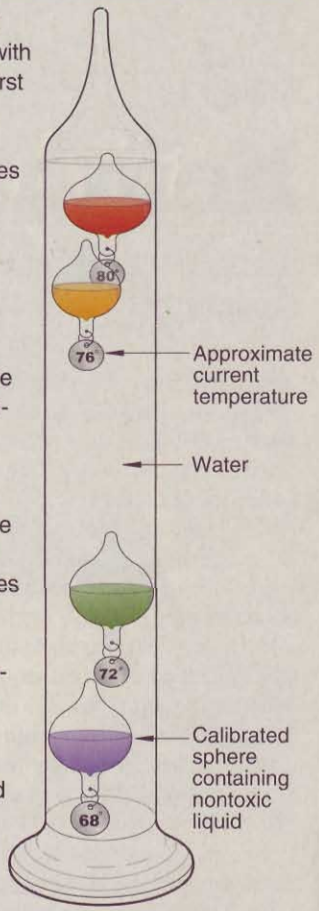

In 1597, Italian scientist Galileo Galilei showed with his thermoscope—the first temperature-indicating instrument—that the density of liquids changes with temperature. This modern thermometer, named after him, works on the same principle. The cylinder contains water and calibrated, liquid-filled spheres. (The manufacturer of the non-toxic liquid keeps its formula proprietary.) Rising temperature causes the density of the water to decrease, and falling temperature causes it to increase. The spheres' densities are close to the water's density, with each differing in weight by just two-thousandths of a gram. As the temperature (and density) of the water changes, spheres with heavier densities sink, while those with lighter densities float. The lowest floating sphere in the upper part of the tube (the one in "equilibrium" whose density equals that of the water) indicates the approximate current temperature, as shown *above*.

Written by **Owen Duvall**
Project design: **Kevin Boyle**

1a ¼" PARTIAL ROUND-OVER SETUP

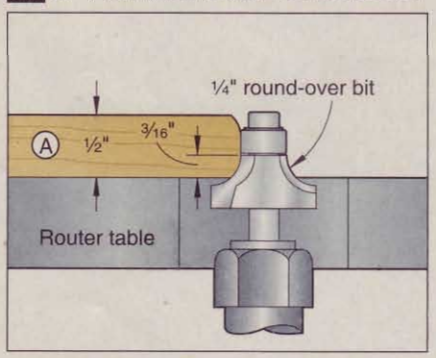

1b ¼" PARTIAL COVE SETUP

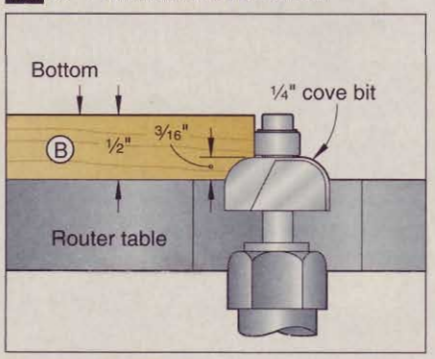

Materials List

Part	FINISHED SIZE T	W	L	Matl.	Qty.
A top blank	½"	6"	6"	C	1
B base blank	½"	7"	7"	C	1
C* feet	¼"	2½" diam.		C	3
D pillars	⅜" diam.		11½"	CD	3

*Parts initially cut oversize. See the instructions.

Materials key: C–cherry, CD–cherry dowel.

Supplies: #4x½" brass flathead wood screws (3), spray adhesive.

Blades and bits: ⅜" and 2⅜" Forstner bits, ¼" round-over and ¼" cove router bits, countersink bit, no. 7 crown-tooth scrollsaw blade.

Buying Guide

Thermometer: 12" Galileo thermometer, no. 679500, $14. Call Torka, Inc. at 800/286-7665 or go to www.torka.com.

quick-and-easy **height gauge**

Raise your cutting accuracy to new levels.

Set the cutting depth of tablesaw blades easily using this adjustable gauge. To ensure accuracy, we outfitted it with a steel rule. See the Buying Guide for our source.

Start by cutting the body to size from ¾" maple, as shown in the drawing. Plow a 13⁄32"-deep groove, sized to fit your rule, in one face of the body, where shown.

Next, set your dado blade to ¼", and cut the combined rabbet and groove in the body for the sliding bar. To do this, place the gauge body on edge, with the ungrooved face against the fence. Cut the rabbet/groove in three passes, with the last one at 1⅝", as shown on the drawing.

Drill and countersink the screw hole. Then sand and finish the body.

Use a coping saw or scrollsaw to shape the ¼" acrylic sliding bar to the dimensions shown. Create the adjustment slot by drilling a pair of 5⁄16" holes, where shown, and cutting out the material between them. Smooth the edges of the slot and the outer edges of the bar using a fine file. Buff the outer edges if you want to make them super smooth. Now, scribe a cursor line on the back face, where shown, using the method described in **Photo A**, *page 81*.

Attach the steel rule in the groove using double-faced tape. Place the bottom end of the rule ¼" from the bottom of the body. Then install the sliding bar.

To use the gauge, set the cursor line to the desired height. Hold the sliding bar in its groove while adjusting the gauge to keep the bar square with the base. Place the body on the tablesaw top beside the blade, as shown in the photo, and raise the blade to set the height.

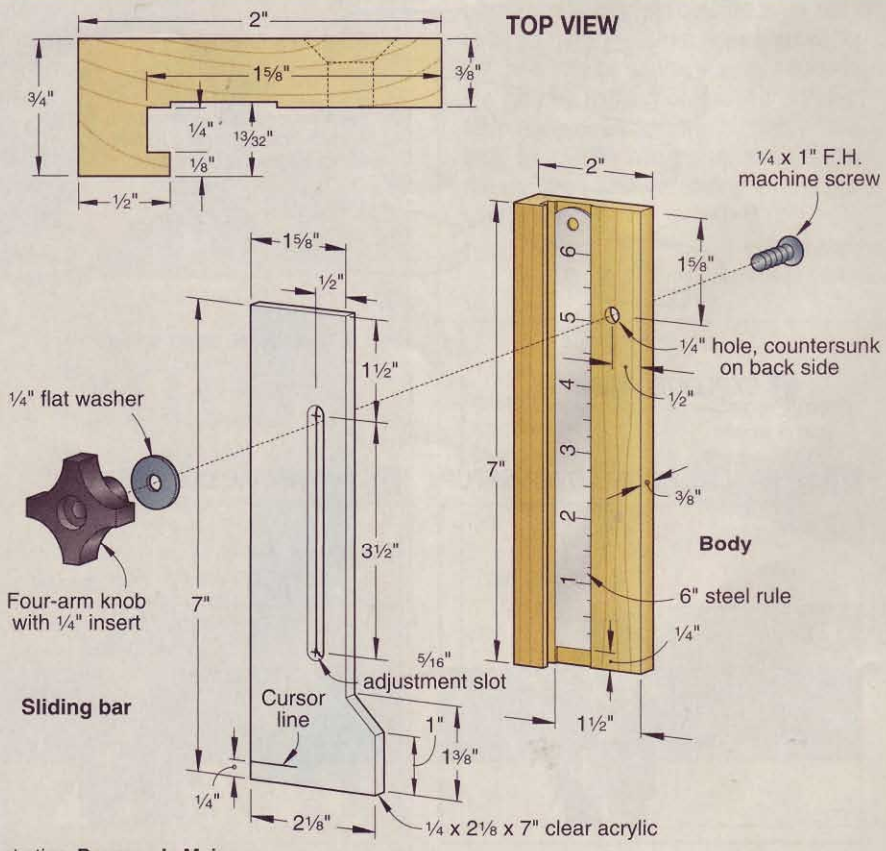

Illustration: **Roxanne LeMoine**

Buying Guide

Hardware. Stainless steel rule no. 06K20.06, $1.40 each; 1½" four-arm plastic knob (¼-20 threads) no. 00M55.30, $1.30 each. Call Lee Valley at 800/871-8158, or go to www.leevalley.com.

how to level tables to tools

It's easy to do, and essential for the safe and effective operation of workshop machinery.

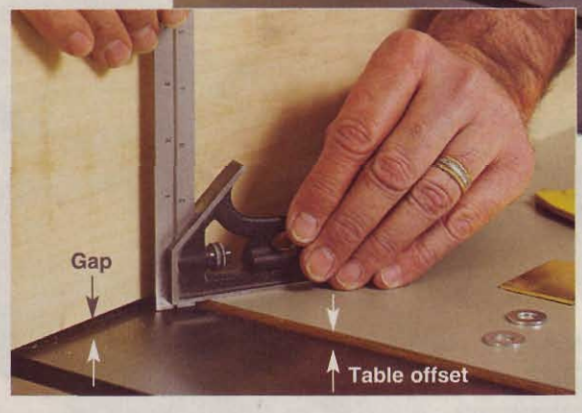

Use an adjustable square or calipers to measure the tables' offset and gaps under the straightedges.

Whether you're building the dual-function workstation presented in the article on *page 62* or making your own base for a tool, such as a tablesaw, mitersaw, or thickness planer, you need to level the tables to the tool (bring them to the same plane). Coplanar tables provide a continuously even worksurface necessary for stable stock support, accurate cutting, and safe workpiece movement. *Below*, you'll learn how to level tables in four simple steps.

You also can use this process to check and level accessories, such as infeed and outfeed support tables, to your tools. Because accessories have various types of leveling provisions, refer to the manufacturer's instructions on how to adjust them.

STEP 1

Find two straightedges of sufficient length to span the tool and extension tables. You can use metal straightedges, or make wooden ones by jointing the edges of two boards. For example, to reach across the 51"-long router-cabinet top of the dual-function workstation and the 20"-wide cast-iron tablesaw top, we made straightedges by jointing two 1×6×72" boards.

Clamp the straightedges along the front and back of the extension table or top, as shown in the photo, *top*. (When leveling an accessory table to a tool, clamp the straightedges to the tool's table.)

STEP 2

Determine the approximate shim thicknesses needed for leveling by measuring the offset between the tool's table and extension near the straightedges, as shown in the inset photo, *above*. Then, measure the gaps between the straightedges and the tool table at the table's opposite edge.

STEP 3

Insert shims to get a snug fit between the tool's table and straightedges, as shown in the photo, *right*. Suitable shims include metal flat washers; ⅛" and ¼" hardboard; sheet metal (available at hobby stores and home centers); and metal shim stock, such as from an automotive feeler gauge. When you need just a smidgen more thickness for a perfect fit, add a piece or two of aluminum foil (it measures just .002" thick) to the stack.

As an alternative to combining shims, you can make custom shims by planing hardwood, such as oak or maple, to the exact thicknesses needed. Don't use any material that will compress at all under the weight of the machine.

Find the right combination of shims to fill the gaps between the tool's table and straightedges at the locations over the mounting holes in the tool's base.

STEP 4

Finally, remove the shims, drill holes in them if necessary for your tool's mounting screws, and install the shims under the tool. Also, recheck the level periodically as tool movement, knocks, and changes in humidity can cause table misalignment.

A quick guide to must-know terms
used throughout *WOOD*® magazine

All-thread: Steel rod (sometimes called drill rod) that has been threaded along its entire length. (Picture a long bolt without its head.) The material comes in a variety of diameters and threads per inch (tpi), and usually measures 36" long. You hacksaw it to any desired length to create everything from custom bolts to adjustment mechanisms for jigs.

Contact adhesive: A thin, rubber-based adhesive, used most often for bonding plastic laminate to substrates. You apply the adhesive to both mating surfaces, then allow it to dry until tacky. When joined, the surfaces bond on contact.

Dry-fit: Temporarily assembling a project without glue or permanent fasteners. Use this technique to check the accuracy and fit of joinery, and to determine the sequence for final assembly.

Edging: A solid wood strip, usually ¼" thick or greater, applied to a sheet product, such as plywood, to hide the bare edge. Generally, edging is applied oversize, and flush-trimmed to matching thickness, as shown, *below*.

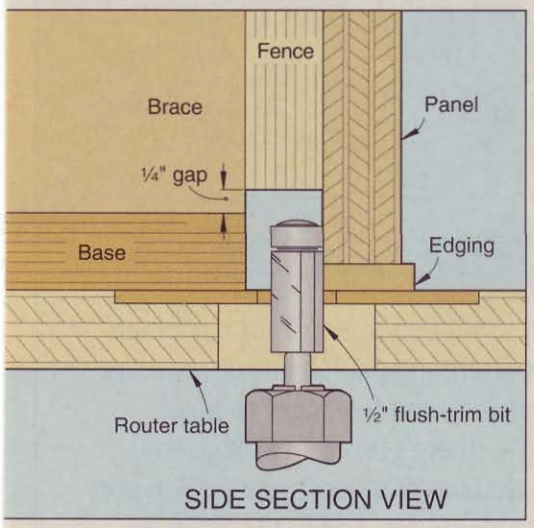

False front: A non-structural face applied to a drawer assembly to provide the drawer's finished visible surface. A false front often is larger than the drawer-box front. Because it is separate from the drawer box, you can adjust the false front, upon assembly, to get the best fit in the drawer opening without repositioning the slides or other drawer hardware.

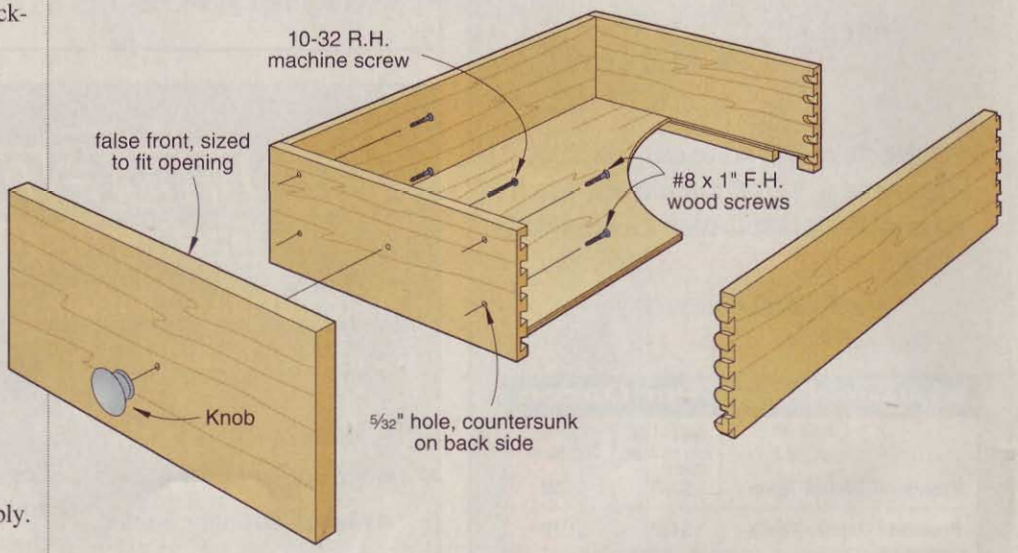

Arbor: In a tablesaw, the threaded shaft on which the saw blade mounts and is held in place with a nut, as shown *below*. Riding on bearings, the arbor gets rotated by the drive belts to spin the blade. Most saws with 10" blades have a ⅝"-diameter arbor.

Trunnions: In a tablesaw, the assembly (usually cast-iron) that supports the drive mechanism and controls the blade tilt and elevation. On a cabinet-style saw, shown at *right*, the trunnions usually mount to the trunnion saddle which, in turn, mounts to the saw's cabinet. On a contractor's saw, they mount to the underside of the table.

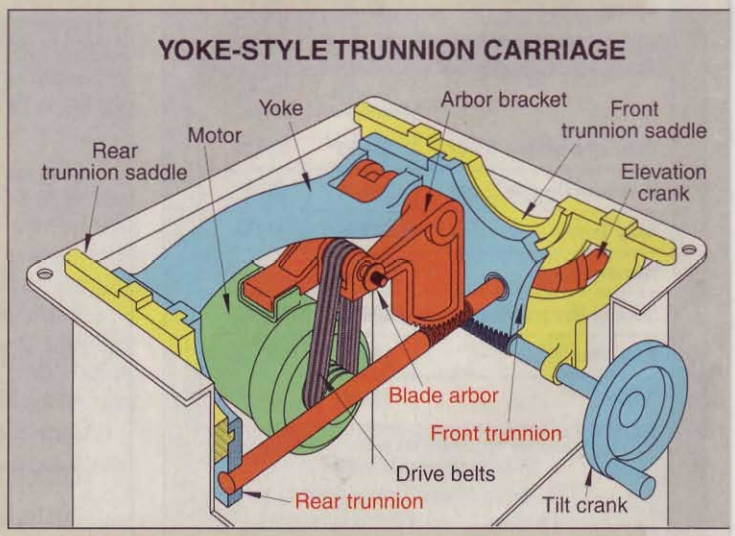

shop-proven products

These woodworking wares passed our shop trials

Take the winter chill off with a Hot Dawg

Over the years, I've tried all manner of portable heaters to warm my garage workshop. But none of them worked well enough to provide even heat throughout the shop. Last fall, I installed a Hot Dawg HD45 45,000-Btu, gas-fired heater from Modine, and the world has been a much cozier place ever since.

Wired to an inexpensive thermostat, the Hot Dawg maintains a constant temperature all winter long. I set mine at 50°, then bump it up to 68° when I go into the shop to work on a project. Within about five minutes, I have shirtsleeve weather.

At only 12" tall, and requiring only 1" minimum clearance above the unit, the compact Hot Dawg HD45—designed for a 2- to 2½-car garage—tucks in nicely against the ceiling without interfering with garage-door operation. Modine's larger Hot Dawgs (the 60,000- and 75,000-Btu models) are only 18" tall.

Every Hot Dawg heater offers flexibility regarding installation. By merely flipping the unit over, you can put the gas, electric, and flue connections on the left or right. The powered exhaust directs either up through the roof or out through a sidewall. And, you can order your heater to run on either natural gas or propane.

One thing I really like about my Hot Dawg is that it doesn't have a pilot light constantly burning that can ignite solvent fumes. Instead, it uses a hot-surface ignition system that operates only when needed. It's not a sealed combustion chamber, though, so I just shut the unit off at the thermostat before using solvents or solvent-based finishes.

—Tested by Dave Campbell

Hot Dawg garage heater

Performance	★★★★★
Price	HD30 (30,000 Btu), $720; HD45 (45,000 Btu), $755; HD60 (60,000 Btu), $790; HD75 (75,000 Btu), $825

Modine Manufacturing
800/828-4328, www.modine.com

Quick-change holesaw cuts pretty fast, too

A drill-mounted holesaw works great for boring "in-between" size holes in projects—those too big for most Forstner bits, but too small to jig up a router and trammel, such as the wire-routing holes in an entertainment center. They also come in handy for cutting toy wheels. If you've used a holesaw only once in your life, though, you've no doubt struggled with removing the plug from the saw after making the cut.

The quick-release action of Bosch's Power Change holesaw system eases plug removal significantly. Each cutter mounts to the mandrel like a pneumatic nailer to an air hose, locking in place with a spring-loaded collar. To unplug the cutter, I just popped it off the mandrel and remounted it slightly askew; the pilot bit pushed out even the most stubborn plugs. As with any holesaw, that cutter gets pretty hot after a heavy cut, so I had to let it cool or handle it with a rag in some cases.

A quick-change feature means little if the tool doesn't cut worth a hoot. But I found the Power Change more aggressive than other holesaws I've used. Whether cutting into wood, sheet metal, or plate steel, I could really feel the teeth bite into the material at first contact. Progressively deeper gullets around the rim remove big chips fast. When cutting metal, Power Change produced curled metal shavings, compared to the small scrapings left behind by a typical holesaw.

The 12-piece Master Set I tested comes with cutter diameters ranging from ¾" to 3". Optional cutters go from 9/16" to 6".

—Tested by Jeff Hall

Bosch Power Change holesaw

Performance	★★★★★
Price	12-pc. Master Set (PC11PCM), $100

Bosch
877/267-2499, www.boschtools.com

Continued on page 104

The BLUE Mark of Quality.

Kreg
POCKET HOLE SYSTEMS™
Quality tools, education, service and value.
Expect this and more from KREG, the leader in Pocket Hole technology.
Kreg Jig® ProPack

A better way to join wood.

Faster... No waiting for the glue to dry.
Stronger... Screws put unmatched clamp pressure on the joint line.
Simpler... Drill pocket holes in only one workpiece. Align for assembly with a single clamp.
Better! Faster assembly, stronger joints, fewer headaches. Give it a try today!

Two simple steps to wood joinery...

Drill pocket holes. Drive screws.

www.kregtool.com Kreg 800.447.8638

MY WAX... BRIWAX
YOUR PROJECTS DESERVE THE FINEST FINISH IN THE WORLD!

BRIWAX can be used as a convenient one-step finishing process to make all your projects look their best. With 8 colors from which to choose, once you discover the BRIWAX difference you will join countless other professionals who declare "My Wax... BRIWAX".

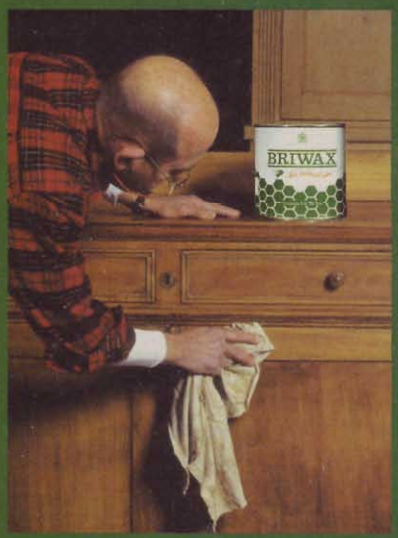

A Natural Blend of Carnauba Wax and Beeswax
Perfect for
Furniture
Antiques
Cabinets
Flooring
Paneling
And More...
AVAILABLE IN CLEAR & 7 SHADES
Call For A Free Sample
BRIWAX
www.briwax.com
or Call: 1-800-5BRIWAX
ASK ABOUT OUR SPECIAL OFFERS

Circle No. 55

shop-proven products

Grip-Tite improves on an already great product

Way back in 1991, *WOOD*® magazine first raved about Grip-Tite magnetic feather boards. The simple concept of springy polycarbonate hold-down blades on a super-strong magnetic base proved as safe and effective as it was easy to use. Well, they've come a long way, baby, to arrive at the Grip-Tite 2000 System.

Like the original, the Grip-Tite 2000 still has the polycarbonate spring blades to press stock down on the table and against the fence. And it still sticks like crazy to steel and iron—I measured 40 lbs. of sideways force and 60 lbs. of lifting force to break the base loose from my cast-iron tablesaw top. A cam lever on the base makes it easy to pry it away when you need to.

The newest additions to the system, though, are Rollerguides. With a Grip-Tite mounted to a steel fence as shown in the photo, these small abrasive-covered drums actually pull your workpiece toward the fence. I purposely set a board about ⅛" away from the fence and started feeding. The Rollerguide on the infeed Grip-Tite snugged that board up to the fence before it got to the tablesaw blade.

You want to talk safety? Halfway through an 8'-long cut in ¾" oak, I let go of the board, walked to the back of the saw, and *pulled* it the rest of the way through. I wouldn't try this with any other feather board, but the Grip-Tites held the workpiece so firmly against the fence and tabletop that I didn't even burn the cut edge. And, my fingers never got near the blade. (For short workpieces, you complete the cut by feeding it through with the next workpiece or a scrap of the same thickness.)

Most tablesaws don't have steel fences, so a screw-on steel auxiliary fence face comes with the Grip-Tite 2000 System. That kit also includes two magnetic feather boards equipped with Rollerguides, and a great how-to video.

Here's more good news: If you bought into the Grip-Tite system way back when, Rollerguides that retrofit the old solid-oak Grip-Tites sell for only $15 each (plus $1 shipping).

—Tested by Garry Smith

Grip-Tite 2000

Performance ★★★★★

Price **System, $150 ppd.; feather board alone without Rollerguides, $47 (ppd.); Rollerguides, $16 each (ppd.)**

Mesa Vista Design
800/475-0293, www.grip-tite.com

Continued on page 106

Pocket Hole Screws from the Source!

- Square Drive Stops Driver Bit Slippage!
- Hardened Steel for Extra Strength
- Available in Coarse OR Fine Thread
- Available in #6 & #8 in both 1-1/4", and 1-1/2" lengths!
- Kreg Jigs & Pocket Hole Supplies
- Over 750 Other Types of Square Drive Screws in Stock!

Write for FREE Catalog!
Circle No. 648

McFEELY'S
SQUARE DRIVE SCREWS
PO Box 11169 • Dept WDMKD • Lynchburg • VA • 24506
Toll Free 1-800-443-7937 or at www.mcfeelys.com

CUSTOM DUST BAGS WITH 1-MICRON FILTRATION

See us at AWFS Booth #637

QUALITY WORK AT LOW PRICES!

SHAKER FELT available:
Captures very fine dust, will handle 40 CFM for every square foot of cloth and stands up to rugged use.

Custom manufactured:
- → All types of dust bags
- → Bag house bags
- → Variety of fabrics
- → All seams double-stitched for long life & durability
- → Clamps
- → Polybags

(Fabric samples available)

AMERICAN FABRIC FILTER COMPANY
PO BOX 7560
Wesley Chapel, FL 33543
E-mail: sift@aol.com
www.americanfabricfilter.com
Ph: (800) 367-3591
(813) 991-9400
Fax: (813) 991-9700

Circle No. 2122

shop-proven products

MS-UV takes your saw off the beaten path

When it comes to built-in projects, you can spend a lot of time dragging workpieces back and forth from the shop to the house fine-cutting pieces to fit. Think how much faster the assembly would go if your tools were in the same room as the project! Although I've still not figured out a way to conveniently move my tablesaw, Ridgid's Mitersaw Utility Vehicle (MS-UV) does the trick for my mitersaw.

After mounting my 10" mitersaw to the MS-UV, I gave it the ultimate mobility test: hauling it up to the second floor of my house, where I was trimming out a room. The hand-truck-like design and big 12" rubber wheels negotiated those stairs with ease. When I pulled the mitersaw around to the backyard to finish up some railing on my deck, the MS-UV proved well balanced, without any of the top-heaviness I've experienced with upright mitersaw stands.

Once on-site, the MS-UV goes from folded to fully functional in just seconds with the help of a gas-filled strut raising one end of the stand while you lift the other. The roller-style work supports extend to as much as 4' on both sides of the stand, which is rated to hold 200 lbs. of tool and materials. I like that the work supports don't have to be removed from the stand to stow it. In fact, they don't even need to be reset to saw level at each setup. I just set them and forgot them.

The MS-UV stores with the saw still mounted. Lying flat, it can tuck under a bench or a pickup tonneau cover; stand it on end, as shown in the inset photo, and you reduce the amount of floor space it takes up by about half.

—Tested by Larry Christensen

Ridgid MS-UV (AC9940) Mitersaw Utility Vehicle

Performance	★★★★★
Price	$200

Emerson Tool Company
866/539-1710, www.ridgidwoodworking.com

Continued on page 108

Why should I use System Three on my projects?

"Because Woodworking Built Our Company."

Kern Hendricks -
Chemical Engineer & Founder

Get a rebate coupon for $5.00 off your next purchase* at: systemthree.com click: "Rebates & Coupons"

* $5.00 rebate on purchases of System Three Resins, Inc. products over $25.00 made between 10.01.03 and 3.30.04. Limit 1 per customer. Instructions on rebate coupon must be followed.

We Understand Specific Woodworking Applications.

For over 2 decades we've been working with woodworkers to formulate the highest quality epoxy adhesives for their specific applications.
We specifically designed MirrorCoat to create a high gloss, decorative coating on wood and other materials.

Pourable Perfection.

MirrorCoat is specially formulated to create glossy, high build resin surfaces on bars, counters and tabletops.
Pour a perfect durable, smooth, glossy finish on many surfaces such as wood, ceramics, plaster and masonry.

SYSTEM THREE

Pourable, self-leveling, bartop coating. Scratch & stain resistant as well as alcohol & water proof.

Find a dealer near you: 1.800.333.5514

©2003 System Three Resins, Inc. All Rights Reserved.

SIMPLE WOODWORKING SOLUTIONS THAT WORK EVERY TIME!

POCK'IT JIG™ KIT

THE KIT CONTAINS:
- Pocket Jig with Clamp
- 3/8" Step Drill Bit
- Stop Collar for Drill Bit
- Hex Wrench for Collar
- Square Drive Screws
- 6" Square Drive Bit

TAKE IT HOME AND MAKE JOINTS - NOTHING MORE TO BUY.

$39.95

SOLD ONLY THRU DEALERS, SEND FOR OUR LIST

DOW'L SIMP'L™ KIT

THE DOW'L SIMP'L KIT HAS EVERYTHING NEEDED FOR EDGE TO EDGE & RIGHT ANGLE DOWELING

IN THIS KIT:
- Jig with Clamp
- 3 Brad Point Bits
- 3 Drill Bushings
- A supply of Dowels
- A Tube of Wood Glue

$19.95

SOLD ONLY THRU DEALERS, SEND FOR OUR LIST

JOINERY MADE SIMPLE!

JOINT'R CLAMP™ KIT

(2 clamps per kit)

Now you can straight line rip a crooked board on any table saw with this versatile kit.

(2nd clamp not shown)

$16.95

SOLD ONLY THRU DEALERS, SEND FOR OUR LIST

SIMP'L PRODUCTS Inc.
21 Bertel Avenue, Mount Vernon, NY 10550
Web Site: woodjigs.com E-Mail: info@woodjigs.com

shop-proven products

Replace the cutter, not the whole bit

When a router bit gets dull, your options are pretty limited: sharpen it, or toss it and buy a new one. In either case, if you're in the middle of a machining operation, you'll have to remove the bit and probably re-create the setup for that cut. Wouldn't it be great if you could just wave a wand and have a new cutter appear on the bit?

Nova System routing tools with replaceable cutters

Performance	★★★★☆
Price	System, $80; additional knife profiles, $22 per pair

Amana Tool
800/445-0077, www.amanatool.com

Amana's ½"-shank Nova System makes it almost that easy. Instead of carbide cutters brazed onto the bit body, Nova's "knives" attach to the bit body by means of a knife retainer (in fingers in the photo). Notches in the knives index them to the body to ensure perfect alignment.

Amana offers two different bit-body styles in the Nova System, and I tested both. The "A" body (shown in the photo) has a ball-bearing guide (not shown) on the end of the shank and is designed for edge-routing profiles; the bearingless "B" body is used for plunge profiles, such as V-grooves and flutes.

The wide-open bodies create little hindrance for chips, making these bits aggressive. In fact, I tried climb-cutting (routing *with* the bit rotation, rather than against it) with the ⅜" round-over knives, and felt them really pull me when performing this task. Climb-cutting can be dicey with conventional bits, too, but I felt even less comfortable doing it with these bits.

Changing knives takes about as long as changing a conventional router bit, but I didn't need to remove the bit body from the router. And, because the knives themselves are flat, they lie flat on a sharpening stone for quick touch-ups.

A Nova bit weighs about twice as much as the same profile of a standard router bit, which contributed to a slight vibration when I used the system with my 1½-hp router. The vibration didn't affect the quality of the cut, but it did tickle my hands.

Whether you opt for the A or B body, you also get three profiles of knives with the Nova System. Amana offers a total of 23 edge profiles and five plunge profiles, with each pair of knives selling for about $22. Up front, the cost of the set is about equal to buying those three bits—the cost savings come when it's replacement time.

—Tested by Jeff Hall

Continued on page 110

For All Your Cabinet Needs...
We have the largest selection of cabinet hardware in the industry.
Over 8000 items in stock.
Check out our website www.wwhardware.com
Call today for our FREE 312 page catalog!
Woodworker's Hardware
PO Box 180 Sauk Rapids, MN 56379
800-383-0130
Mention offer #382

shop-proven products

Up-front bevel lock stops mitersaw reacharound

Delta MS350
10" compound mitersaw

Performance	★★★☆☆
Price	$200

Delta Machinery
800/438-2486, www.deltamachinery.com

I'll admit I don't often lay the blade of my mitersaw over to make a bevel cut, but when I do, reaching around the back of the saw to loosen the bevel lock is a tremendous pain in the… um, backside. Delta's MS350 10" compound mitersaw prevents that pain by moving its bevel lock right up front.

Now, both the bevel- and miter-locking mechanisms share that big twist-to-lock handle that sticks out the front of the turntable. With the handle pushed in, as shown in the photo, it operates the bevel lock; when pulled straight out, it operates the miter lock. This system works well, but seems backward to me. (I use that handle to rotate the turntable, and so I ended up accidentally pushing it back in most of the time.)

When I first powered up the saw, I was surprised at how quiet its 15-amp motor is, and wondered if it had enough ponies for the tough cuts. Nonetheless, it sliced quickly and cleanly through 4×4 treated lumber time and again. In ¾" stock, the MS350 crosscut 5⁷⁄₁₆"—a capacity about in the middle of the pack for today's 10" compound mitersaws.

The MS350's bevel and miter scales are a mixed bag, however. The bevel scale itself has widely spaced hairline markings, but the cursor is so thick, it's hard to tell when you're exactly on your mark. And, although the miter scale is graduated in clean ½° increments, its cursor doesn't overlay the markings, which would make it easier to read.

—Tested by Larry Christensen

About our product tests

We test hundreds of tools and accessories, but only those that earn at least three stars for performance make the final cut and appear in this section. Our testers this issue include: *WOOD*® magazine products editor **Dave Campbell**, computer network technician **Larry Christensen**, high-school woodworking teacher **Jeff Hall**, and machinist **Garry Smith**. All are avid woodworkers.

what's ahead

A sneak peek at the November 2003 issue of *WOOD*® magazine **on sale October 14**

Projects for your home and shop

FEATURED PROJECT

Classic round oak dining table

This 48"-diameter beauty proves that a table can be as delectable as the food served upon it. Features include easy-to-make kerf-bent aprons and a top that expands to 72" long with the addition of two leaves.

More workshop wonders

Our coverage of Idea Shop 5 continues with detailed plans for building the mobile drawer cabinet, sanding center, and wall system. See *page 47* for more on each of these projects.

Shining showcase

Display your prized collectibles in this handsome, lighted unit. It requires only a moderate investment in time and materials.

More tools and techniques than you can shake a 2x4 at

TOOL TEST

TOOL TEST

Two tool reviews

Who makes the top pocket-hole jig? Which random-orbit sanding discs work best? After extensive testing, we know the answers, and so will you.

Lathe-tool sharpening demystified

Want to effortlessly shape wood on your lathe? Here's how three top pros sharpen six of the most-used turning tools for catch-free cutting.

A super-smooth finish for oak tabletops

Pick the right products and apply them correctly for an oak surface that you can't resist running your fingers across.

Tune your tablesaw to perfection

Learn how to adjust and maintain your tablesaw for smooth, safe operation and hair-splitting accuracy.

13 shop-proven tricks for cutting plywood

Tired of low-quality cuts in high-priced plywood? Achieve flawless results with these tips from the *WOOD* magazine workshop.